K201-13

KITZ

Steel Ball Valves

KITZ CORPORATION OF AMERICA

KITZ Steel Ball Valves
Floating Ball Design

KITZ
Steel Ball Valves

Contents

2 Design and Inspection Standards
2 KITZ Product Coding
3 Product Range
7 Design Features
10 KITZ HYPATITE® PTFE Ball Seats
11 Low Emission Design Features
13 Pressure-Temperature Ratings
16 Class 150 / 300 Cast Steel Ball Valves
25 Class 600 / 1500 Carbon Steel Ball Valves
27 Class 150 / 300 Cast Stainless Steel Ball Valves
36 Class 600 / 1500 Cast Stainless Steel Ball Valves
38 Class 150 / 300 Cryogenic Ball Valves
44 2000 / 1500 WOG Carbon Steel Ball Valves
51 Type 600 Carbon Steel Ball Valves
52 Type 1500 / 1000 Carbon Steel Ball Valves
67 2000 / 1500 WOG Stainless Steel Ball Valves
77 Type 600 Stainless Steel Ball Valves
78 Type 800 Stainless Steel Ball Valves
79 Type 1500 / 1000 Stainless Steel Ball Valves
91 Type 1500 / 1000 Carbon Steel Ball Valves
103 Type 1500 / 1000 Stainless Steel Ball Valves
115 Dimensions of Actuator Mounting Pads
117 Construction and Materials

Technical Information
125 Technical Features of KITZ HYPATITE® PTFE Ball Seats
127 Fire Test Standards
129 General Precautions
130 Flow Characteristics
131 Steel Pipe Flanges

The products introduced in this catalog are all covered by ISO 9001 and 9002 certification awarded KITZ Corporation, KITZ Corporation of Europe, S.A. and KITZ Corporation of Taiwan.

Design and Inspection Standards of KITZ Flanged Ball Valves

Item		American Standards	ISO Standards
Pressure-temperature ratings	Body	ASME B16.34	
	Resilient sealing parts	API608	ISO 17292
General valve design		API608	ISO 17292
Shell wall thickness		ASME B16.34	ISO 17292
Port diameter		API608*1	ISO 17292
Face-to-face dimensions		ASME B16.10	
End flange dimensions and flange gasket facing		ASME B16.5	
Pressure test		API 598 or API 6D*2	ISO 17292
Fire test		API 607 or API 6FA	ISO 10497

*1 Single Reduced Bore 10" is in accordance with ISO17292/ BS 5351.
*2 Option

Product Coding for KITZ Flanged Ball Valves

Example

	1	2	3	4	5	6	7
		150	U	T	AZ	M	
	G-	150	SC	T	TDZ	M	- FS

1 Valve operation measure
None ... Lever handle
G ..... Worm gear
E ..... Electric actuator
B ..... KITZ Type B double action pneumatic actuator
BS ..... KITZ Type BS spring return pneumatic actuator
FA ..... KITZ Type FA double action pneumatic actuator
FAS ..... KITZ Type FAS spring return pneumatic actuator

2 ASME pressure class
150, 300, 600 or 1500

3 & 6 Shell material & Trim material

3	6	Shell	Trim
SC	None	WCB	304s/s
SC	M	WCB	316s/s
SC	BLM	L C B	316s/s
SC	CLM	L C C	316s/s
U	None	CF8*	
U	M	CF8M*	
U	V	CF3*	
U	O	CF3M*	
U	CN	CN7M*	

*1 :Trim material of Stainless Steel Valve is same as body.

4 Symbol for ball valves

5 Valve design
DZ..... Full Bore, split body with ISO / CAPI actuator mounting pad
B ..... Full Bore, split body with KITZ actuator mounting pad
AZ..... Single Reduced Bore, uni-body with ISO / CAPI actuator mouting pad
AL..... Single Reduced Bore, uni-body with Cryogenic Extended Bonnet

6 See 3

7 "FS" For Flexible graphite packing and gasket for super-fire-safe provision in accordance with API607
No symbol for PTFE packing gasket.

Design and Inspection Standards of KITZ Threaded Ball Valves

Item		American Standards
Pressure-temperature ratings	Body	KITZ Standard
	Resilient sealing parts	KITZ Standard
Shell wall thickness		ASME B16.34*1
Face-to-face dimensions		KITZ Standard
End connections	Threaded	ASME B1.20.1
	Socket Weld	ASME B16.11
	Buttweld	ASME B16.25
Pressure test		API 598
Fire test		API 607

*1 Except AKSCTKM (50), AKUTKM (52) and AKUTHM (53) which are KITZ standard

Product Coding for KITZ Threaded Ball Valves

Example

	1	2	3	4	9	5	6	7	8
	AK	SC	T	K		Z	M	- FS	O
	AK	U	T	H	W	Z	M		
	AW	SC	3T	F		Z	M	- FS	

1 End connection
AK ..... Tapered NPT (ASME B1.20.1)
AW ..... Socket Weld (ASME B16.11)
AK/AW ..... Threaded x Socket Weld

2 Shell material
SC ..... Carbon Steel
U ..... Stainless Steel

3 Valve Type
T ..... Floating Ball
3T 3-PC

4 Bore design
K ..... Double Reduced
H ..... Single Reduced
F ..... Full

5 Mounting pad
Z ..... Integral (ISO-5211 on 3-pc)

6 Trim (Ball and stem)
M 316SS

7 Options
FS ..... Fire Tested per API 607

8 Operator
None ..... Locking Lever
O ..... Locking Oval

9 Special Features
W ..... Seal Welded **End connection**
AK ..... Tapered NPT (ASME B1.20.1)
AW ..... Socket Weld (ASME B16.11)

Product Range

Material	Figure	Code No.	Class	Type	Bore	Ends		Body
Carbon Steel	150SCTDZM		150	Low Emission Level-Ⅱ (Max.20ppm.)	Full	Flanged... ASME B16.5	Anti-Static Device	A216 Gr. WCB
	150SCTDZM-FS						Fire Safe Anti-Static Device	
	G-150SCTDZM						Anti-Static Device	
	G-150SCTDZM-FS						Fire Safe Anti-Static Device	
	150SCTAZM			Low Emission Level-Ⅱ (Max.20ppm.)	Single Reduced		Anti-Static Device	
	150SCTAZM-FS			Low Emission Level-Ⅱ (Max.50ppm.)			Fire Safe Anti-Static Device	
	G-150SCTAZM			Low Emission Level-Ⅱ (Max.20ppm.)			Anti-Static Device	
	G-150SCTAZM-FS			Low Emission Level-Ⅱ (Max.50ppm.)			Fire Safe Anti-Static Device	
	300SCTDZM		300	Low Emission Level-Ⅱ (Max.20ppm.)	Full		Anti-Static Device	
	300SCTDZM-FS			Low Emission Level-Ⅱ (Max.50ppm.)			Fire Safe Anti-Static Device	
	300SCTAZM			Low Emission Level-Ⅱ (Max.20ppm.)	Single Reduced		Anti-Static Device	
	300SCTAZM-FS			Low Emission Level-Ⅱ (Max.50ppm.)			Fire Safe Anti-Static Device	
	G-300SCTAZM			Low Emission Level-Ⅱ (Max.20ppm.)			Anti-Static Device	
	G-300SCTAZM-FS			Low Emission Level-Ⅱ (Max.50ppm.)			Fire Safe Anti-Static Device	
	600SCTBM		600		Full		Anti-Static Device	A105
	600SCTBM-FS						Fire Safe Anti-Static Device	
	1500SCTBM		1500				Anti-Static Device	A216 Gr. WCB
	1500SCTBM-FS						Fire Safe Anti-Static Device	
Stainless Steel	150UTDZM (C)		150	Low Emission Level-Ⅱ (Max.20ppm.)	Full	Flanged... ASME B16.5	Anti-Static Device	A351 Gr. CF8M
	150UTDZM-FS (C)						Fire Safe Anti-Static Device	
	G-150UTDZM (C)						Anti-Static Device	
	150UTAZM			Low Emission Level-Ⅱ (Max.20ppm.)	Single Reduced		Anti-Static Device	
	150UTAZM-FS			Low Emission Level-Ⅱ (Max.50ppm.)			Fire Safe Anti-Static Device	
	G-150UTAZM			Low Emission Level-Ⅱ (Max.20ppm.)			Anti-Static Device	
	G-150UTAZM-FS			Low Emission Level-Ⅱ (Max.50ppm.)			Fire Safe Anti-Static Device	
	300UTDZM		300	Low Emission Level-Ⅱ (Max.20ppm.)	Full		Anti-Static Device	
	300UTDZM-FS			Low Emission Level-Ⅱ (Max.50ppm.)			Fire Safe Anti-Static Device	
	300UTAZM			Low Emission Level-Ⅱ (Max.20ppm.)	Single Reduced		Anti-Static Device	
	300UTAZM-FS			Low Emission Level-Ⅱ (Max.50ppm.)			Fire Safe Anti-Static Device	
	G-300UTAZM			Low Emission Level-Ⅱ (Max.20ppm.)			Anti-Static Device	
	G-300UTAZM-FS			Low Emission Level-Ⅱ (Max.50ppm.)			Fire Safe Anti-Static Device	
	600UTBM				Full		Anti-Static Device	
	600UTBM-FS		600				Fire Safe Anti-Static Device	
	1500UTBM						Anti-Static Device	
	1500UTBM-FS		1500				Fire Safe Anti-Static Device	
	150UTALM		150	Cryogenic	Single Reduced			
	G-150UTALM						Anti-Static Device	
	300UTALM		300					
	G-300UTALM							

Material	Figure	Code No.	WOG	Type	Bore	Ends		Body
Carbon Steel	AKSCTKZM-FS	119	2000...1/4"-1" 1500...11/4-2"	Actuator Mounting Pad	Double Reduced	Screwed... ASME B 1.20.1	Fire Safe per API607 Anti-Static Device	A216 Gr.WCB
	AKSCTKZM-FSO	119-LOH						
	AKSCTHZM	217		Two Piece Actuator Mounting Pad	Single Reduced			
	AKSCTHZM-O	217-LOH						
	AKSCTHZM-FS	219					Fire Safe	
	AKSCTHZM-FSO	219-LOH		Actuator Mounting Pad				
	AKSCTHWZM	237		Seal Welded Two Piece Actuator Mounting Pad			Anti-Static Device	
	AKSCTHWZM-O	237-LOH						
	AKSCTHWZM-FS	239					Fire Safe per API607	
	AKSCTHWZM-FSO	239-LOH						
	AKSCTKM	50	600					

Stem	Ball	Gasket	Ball Seat	3/8"	1/2"	3/4"	1"	1 1/4"	1 1/2"	2"	2 1/2"	3"	4"	5"	6"	8"	10"	Page
A276 Type 316	A351 Gr. CF8M/ A276 Type 316	PTFE	HYPATITE® PTFE		●	●	●		●	●	●	●	●	●	●	●		16
		Flexible Graphite			●	●	●		●	●	●	●	●	●	●	●		16
	A351 Gr. CF8M	PTFE	HYPATITE® PTFE														●	17
		Flexible Graphite															●	17
	A276 Type 316/ A351 Gr. CF8M	PTFE	HYPATITE® PTFE		●	●	●		●	●		●	●		●	●	●	18·19
		PTFE Flexible Graphite			●	●	●		●	●		●	●		●	●	●	18·19
	A351 Gr. CF8M	PTFE	HYPATITE® PTFE														●	20
		PTFE Flexible Graphite															●	20
	A276 Type 316/ A351 Gr. CF8M	PTFE	HYPATITE® PTFE		●	●	●		●	●	●	●	●		●	●		21
		PTFE Flexible Graphite			●	●	●		●	●	●	●	●		●	●		21
		PTFE	HYPATITE® PTFE		●	●	●		●	●		●	●		●	●	●	22·23
		PTFE Flexible Graphite			●	●	●		●	●		●	●		●	●	●	22·23
	A351 Gr. CF8M	PTFE	HYPATITE® PTFE														●	24
		PTFE Flexible Graphite															●	24
	A276 Type 316		G/F MoS_2 PTFE		●	●	●		●									25
		Flexible Graphite Spiral Wound			●	●	●		●									25
			MoS2 Nylon		●	●	●		●									26
		Flexible Graphite Spiral Wound			●	●	●		●									26
A276 Type 316	A276 Type 316 A351 Gr. CF8M/	PTFE	HYPATITE® PTFE		●	●	●		●	●	●	●	●		●	●		27
		Flexible Graphite			●	●	●		●	●	●	●	●		●	●		27
	A351 Gr. CF8M	PTFE														●	●	28
	A276 Type 316 A351 Gr. CF8M/	PTFE	HYPATITE® PTFE		●	●	●		●	●		●	●		●	●	●	29·30
		PTFE Flexible Graphite			●	●	●		●	●		●	●		●	●	●	29·30
	A351 Gr. CF8M	PTFE	HYPATITE® PTFE														●	31
		PTFE Flexible Graphite															●	31
	A276 Type 316 A351 Gr. CF8M/	PTFE	HYPATITE® PTFE		●	●	●		●	●	●	●	●		●	●		32
		PTFE Flexible Graphite			●	●	●		●	●	●	●	●		●	●		32
		PTFE	HYPATITE® PTFE		●	●	●		●	●		●	●		●	●	●	33·34
		PTFE Flexible Graphite			●	●	●		●	●		●	●		●	●	●	33·34
	A351 Gr. CF8M	PTFE	HYPATITE® PTFE														●	35
		PTFE Flexible Graphite															●	35
	A276 Type 316		G/F MoS_2 PTFE		●	●	●		●									36
		Flexible Graphite Spiral Wound			●	●	●		●									36
			MoS2 Nylon		●	●	●		●									37
		Flexible Graphite Spiral Wound			●	●	●		●									37
A564 Type 630	A276 Type 316/ A351 Gr. CF8M	PTFE Flexible Graphite	HYPATITE® PTFE		●	●	●		●	●		●	●					38·39
															●	●	●	40
	A276 Type 316/ A479 Type 316/ A351 Gr. CF8M				●	●	●		●	●		●	●					41·42
															●	●	●	43
Stem	**Ball**	**Gasket**	**Ball Seat**	**1/4"**	**3/8"**	**1/2"**	**3/4"**	**1"**	**1 1/4"**	**1 1/2"**	**2"**	**2 1/2"**	**3"**	**4"**	**5"**	**6"**	**8"**	**Page**
A276 Type 316	A276 Type 316		HYPATITE® PTFE	●	●	●	●	●	●	●	●							44
				●	●	●	●	●	●	●	●							45
		PTFE		●	●	●	●	●	●	●	●							46
		PTFE		●	●	●	●	●	●	●	●							47
		Flexible Graphite		●	●	●	●	●	●	●	●							48
		Flexible Graphite		●	●	●	●	●	●	●	●							49
				●	●	●	●	●	●	●	●							50
				●	●	●	●	●	●	●	●							51
				●	●	●	●	●	●	●	●							52
				●	●	●	●	●	●	●	●							53
				●	●	●	●	●	●	●	●							54

Product Range

Material	Figure	Code No.	WOG	Type	Bore	Ends	
Carbon Steel	AKSC3TFZM	317F	1500 : ¼″–1½″ 1000 : 2″	Three Piece ISO 5211 Actuator Mounting Pad	Full	Screwed:ASME B 1.20.1	Anti-Static Device
	AKSC3TFZM-O	317F-LOH	1500 : ¼″–1½″				
	AKSC3THZM	317	1500 : ½″–2″ 1000 : 2½″	Three Piece ISO 5211 Actuator Mounting Pad	Single Reduced	Screwed:ASME B 1.20.1	Anti-Static Device
	AKSC3THZM-O	317-LOH	1500 : ¼″–2″				
	AKSC3TFZM-FS	319F	1500 : ¼″–1½″ 1000 : 2″	Three Piece ISO 5211 Actuator Mounting Pad	Full	Screwed:ASME B 1.20.1	Fire Safe Anti-Static Device
	AKSC3TFZM-FSO	319F-LOH	1500 : ¼″–1½″				
	AKSC3THZM-FS	319	1500 : ½″–2″ 1000 : 2½″	Three Piece ISO 5211 Actuator Mounting Pad	Single Reduced	Screwed:ASME B 1.20.1	Fire Safe Anti-Static Device
	AKSC3THZM-FSO	319-LOH	1500 : ½″–2″				
Stainless Steel	AKUTKZM-FS	129	2000 : ¼″–1″ 1500 : 1¼″–2″	Actuator Mounting Pad	Double Reduced	Screwed:ASME B 1.20.1	Fire Safe per API607 Anti-Static Device
	AKUTKZM-FSO	129-LOH	2000 : ¼″–1″ 1500 : 1¼″–2″				
	AKUTHZM	227	2000 : ¼″–1″ 1500 : 1¼″–2″	Two Piece Actuator Mounting Pad	Single Reduced	Screwed:ASME B 1.20.1	
	AKUTHZM-O	227-LOH	2000 : ¼″–1″ 1500 : 1¼″–2″				
	AKUTHZM-FS	229	2000 : ¼″–1″ 1500 : 1¼″–2″	Two Piece Actuator Mounting Pad	Single Reduced	Screwed:ASME B 1.20.1	Fire Safe per API607
	AKUTHZM-FSO	229-LOH	2000 : ¼″–1″ 1500 : 1¼″–2″				
	AKUTHWZM	247	2000 : ¼″–1″ 1500 : 1¼″–2″	Seal Weld Two Piece Actuator Mounting Pad	Single Reduced	Screwed:ASME B 1.20.1	
	AKUTHWZM-O	247-LOH	2000 : ¼″–1″ 1500 : 1¼″–2″				
	AKUTHWZM-FS	249	2000 : ¼″–1″ 1500 : 1¼″–2″	Seal Weld Two Piece Actuator Mounting Pad	Single Reduced	Screwed:ASME B 1.20.1	Fire Safe per API607
	AKUTHWZM-FSO	249-LOH	2000 : ¼″–1″ 1500 : 1¼″–2″				
	AKUTKM	52	600 : ¼″–2″		Double Reduced	Screwed:ASME B 1.20.1	
	AKUTHM	53	800 : ½″–2″		Single Reduced	Screwed:ASME B 1.20.1	
	AKU3TFZM-O	327F-LOH	1500 : ¼″–1½″	Three Piece ISO 5211 Actuator Mounting Pad	Full	Screwed:ASME B 1.20.1	Anti-Static Device
	AKU3TFZM	327F	1500 : ¼″–1½″ 1000 : 2″				
	AKU3TFZM-FSO	329F-LOH	1500 : ¼″–1½″	Three Piece ISO 5211 Actuator Mounting Pad	Full	Screwed:ASME B 1.20.1	Fire Safe Anti-Static Device
	AKU3TFZM-FS	329F	1500 : ¼″–1½″ 1000 : 2″				
	AKU3THZM-O	327-LOH	1500 : ½″–2″	Three Piece ISO 5211 Actuator Mounting Pad	Single Reduced	Screwed:ASME B 1.20.1	Anti-Static Device
	AKU3THZM	327	1500 : ½″–2″ 1000 : 2½″				
	AKU3THZM-FSO	329-LOH	1500 : ½″–2″	Three Piece ISO 5211 Actuator Mounting Pad	Single Reduced	Screwed:ASME B 1.20.1	Fire Safe Anti-Static Device
	AKU3THZM-FS	329	1500 : ½″–2″ 1000 : 2½″				
Carbon Steel	AWSC3TFZM-O	317FS-LOH	1500 : ¼″–1½″	Three Piece ISO 5211 Actuator Mounting Pad	Full	Screwed:ASME B 1.20.1	Fire Safe Anti-Static Device
	AWSC3TFZM	317FS	1500 : ¼″–1½″ 1000 : 2″				
	AWSC3THZM-O	317S-LOH	1500 : ½″–2″	Three Piece ISO 5211 Actuator Mounting Pad	Single Reduced	Screwed:ASME B 1.20.1	Anti-Static Device
	AWSC3THZM	317S	1500 : ½″–2″ 1000 : 2½″				
	AWSC3TFZM-FSO	319FS-LOH	1500 : ¼″–1½″	Three Piece ISO 5211 Actuator Mounting Pad	Full	Screwed:ASME B 1.20.1	Fire Safe Anti-Static Device
	AWSC3TFZM-FS	319FS	1500 : ¼″–1½″ 1000 : 2″				
	AWSC3THZM-FSO	319S-LOH	1500 : ½″–2″	Three Piece ISO 5211 Actuator Mounting Pad	Single Reduced	Screwed:ASME B 1.20.1	Fire Safe Anti-Static Device
	AWSC3THZM-FS	319S	1500 : ½″–2″ 1000 : 2½″				
Stainless Steel	AWU3TFZM-O	327FS-LOH	1500 : ¼″–1½″	Three Piece ISO 5211 Actuator Mounting Pad	Full	Screwed:ASME B 1.20.1	Fire Safe Anti-Static Device
	AWU3TFZM	327FS	1500 : ¼″–1½″ 1000 : 2″				
	AWU3TFZM-FSO	329FS-LOH	1500 : ¼″–1½″	Three Piece ISO 5211 Actuator Mounting Pad	Full	Screwed:ASME B 1.20.1	Fire Safe Anti-Static Device
	AWU3TFZM-FS	329FS	1500 : ¼″–1½″ 1000 : 2″				
	AWU3THZM-O	327S-LOH	1500 : ½″–2″	Three Piece ISO 5211 Actuator Mounting Pad	Single Reduced	Screwed:ASME B 1.20.1	Anti-Static Device
	AWU3THZM	327S	1500 : ½″–2″ 1000 : 2½″				
	AWU3THZM-FSO	329S-LOH	1500 : ½″–2″	Three Piece ISO 5211 Actuator Mounting Pad	Single Reduced	Screwed:ASME B 1.20.1	Fire Safe Anti-Static Device
	AWU3THZM-FS	329S	1500 : ½″–2″ 1000 : 2½″				

Body	Stem	Ball	Gasket	Ball Seat	¼″	⅜″	½″	¾″	1″	1¼″	1½″	2″	2½″	Page
A216 Gr.WCB	A276 Type316	A276 Type316 A351 Gr.CF8M	PTFE	HYPATITE® PTFE	●	●	●	●	●	●	●	●		55 56
					●	●	●	●	●	●	●			57
A216 Gr.WCB	A276 Type316	A276 Type316 A351 Gr.CF8M	PTFE	HYPATITE® PTFE			●	●	●	●	●	●	●	58 59
					●	●	●	●	●	●	●	●		60
A216 Gr.WCB	A276 Type316	A276 Type316 A351 Gr.CF8M	Flexible Graphite	HYPATITE® PTFE	●	●	●	●	●	●	●	●		61 62
					●	●	●	●	●	●	●			63
A216 Gr.WCB	A276 Type316	A276 Type316 A351 Gr.CF8M	Flexible Graphite	HYPATITE® PTFE			●	●	●	●	●	●	●	64 65
							●	●	●	●	●	●		66
A351 Gr.CF8M	A276 Type316	A276 Type316	—	HYPATITE® PTFE	●	●	●	●	●	●	●	●		67
					●	●	●	●	●	●	●	●		68
A351 Gr.CF8M	A276 Type316	A276 Type316	PTFE	HYPATITE® PTFE	●	●	●	●	●	●	●	●		69
					●	●	●	●	●	●	●	●		70
A351 Gr.CF8M	A276 Type316	A276 Type316	Flexible Graphite	HYPATITE® PTFE	●	●	●	●	●	●	●	●		71
					●	●	●	●	●	●	●	●		72
A351 Gr.CF8M	A276 Type316	A276 Type316	—	HYPATITE® PTFE	●	●	●	●	●	●	●	●		73
					●	●	●	●	●	●	●	●		74
A351 Gr.CF8M	A276 Type316	A276 Type316	Flexible Graphite	HYPATITE® PTFE	●	●	●	●	●	●	●	●		75
					●	●	●	●	●	●	●	●		76
A351 Gr.CF8M	A276 Type316	A276 Type316	PTFE		●	●	●	●	●	●	●	●		77
A351 Gr.CF8M	A276 Type316	A276 Type316	PTFE				●	●	●	●	●	●		78
A351 Gr.CF8M	A276 Type316	A276 Type316 A351 Gr.CF8M	PTFE	HYPATITE® PTFE	●	●	●	●	●	●	●			79
					●	●	●	●	●	●	●	●		80 81
A351 Gr.CF8M	A276 Type316	A276 Type316 A351 Gr.CF8M	Flexible Graphite	HYPATITE® PTFE	●	●	●	●	●	●	●			82
					●	●	●	●	●	●	●	●		83 84
A351 Gr.CF8M	A276 Type316	A276 Type316 A351 Gr.CF8M	PTFE	HYPATITE® PTFE			●	●	●	●	●	●		85
							●	●	●	●	●	●	●	86 87
A351 Gr.CF8M	A276 Type316	A276 Type316 A351 Gr.CF8M	Flexible Graphite	HYPATITE® PTFE			●	●	●	●	●	●		88
							●	●	●	●	●	●	●	89 90
A216 Gr.WCB	A276 Type316	A276 Type316 A351 Gr.CF8M	PTFE	HYPATITE® PTFE	●	●	●	●	●	●	●			91
					●	●	●	●	●	●	●	●		92 93
A216 Gr.WCB	A276 Type316	A276 Type316 A351 Gr.CF8M	PTFE	HYPATITE® PTFE			●	●	●	●	●	●		94
								●	●	●	●	●	●	95 96
A216 Gr.WCB	A276 Type316	A276 Type316 A351 Gr.CF8M	Flexible Graphite	HYPATITE® PTFE	●	●	●	●	●	●	●			97
					●	●	●	●	●	●	●	●		98 99
A216 Gr.WCB	A276 Type316	A276 Type316 A351 Gr.CF8M	Flexible Graphite	HYPATITE® PTFE			●	●	●	●	●	●	●	100 101 102
A351 Gr.CF8M	A276 Type316	A276 Type316 A351 Gr.CF8M	PTFE	HYPATITE® PTFE	●	●	●	●	●	●	●			103
					●	●	●	●	●	●	●	●		104 105
A351 Gr.CF8M	A276 Type316	A276 Type316 A351 Gr.CF8M	Flexible Graphite	HYPATITE® PTFE	●	●	●	●	●	●	●			106
					●	●	●	●	●	●	●	●		107 108
A351 Gr.CF8M	A276 Type316	A276 Type316 A351 Gr.CF8M	PTFE	HYPATITE® PTFE			●	●	●	●	●	●		109
							●	●	●	●	●	●	●	110 111
A351 Gr.CF8M	A276 Type316	A276 Type316 A351 Gr.CF8M	Flexible Graphite	HYPATITE® PTFE			●	●	●	●	●	●		112
							●	●	●	●	●	●	●	113 114

KITZ 150 / 300 SCTDZM / UTDZM Series
Full Bore, Split Body, Side Entry Ball Valves

This is an illustrated cross-section of a typical KITZ full port, split body, floating type ball valve to exhibit the basic design concept.
The actual design of a valve may be slightly different from this illustration, depending on its size and pressure class.

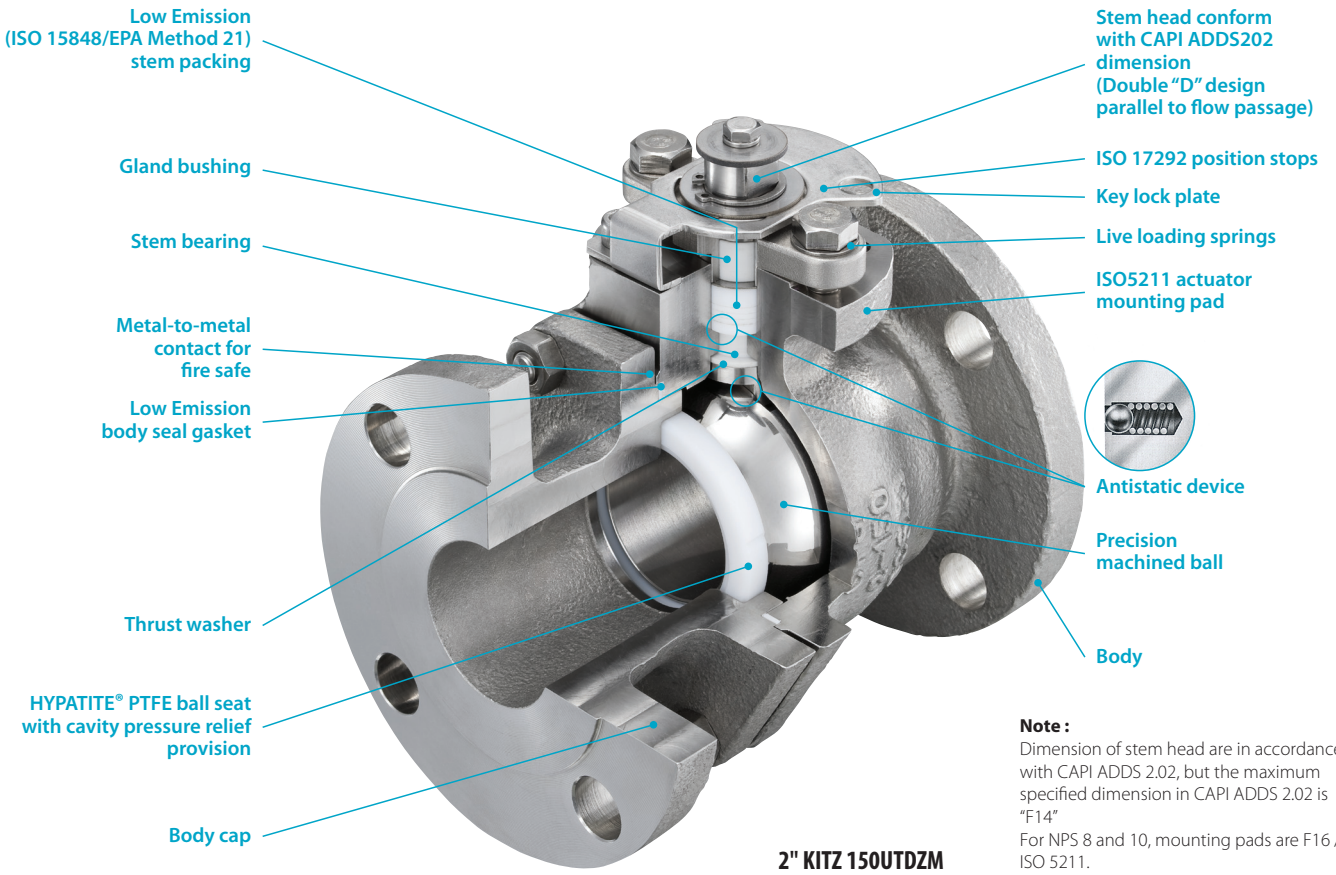

2" KITZ 150UTDZM

Note :
Dimension of stem head are in accordance with CAPI ADDS 2.02, but the maximum specified dimension in CAPI ADDS 2.02 is "F14"
For NPS 8 and 10, mounting pads are F16 / ISO 5211.

Bubble-tight sealing performance with HYPATITE® ball seats

HYPATITE® ball seats, standard stem seals of KITZ ball valves, are made of denatured PTFE, a molecularly reinforced PTFE copolymer, and specifically engineered for high **bi-directional** sealing performance and prolonged service life of valves. Its resistance to high or low temperatures, creep or compression, abrasion and corrosion is all outstanding.

Simplified actuator mounting

For 150 / 300 SCTDZ / UTDZM and SCTAZM / UTAZM Series ball valves, **ISO 5211** actuator mounting pad is integrally provided for uniformly simplified mounting of any actuators provided with valve mounting flanges designed to ISO 5211 dimensional requirement.
Mounting pad and stem meet CAPI standard.

Easy maintenance

Split body design for KITZ SCTDZM / UTDZM Series provides the convenience of very easy maintenance critically required for process plants. Body inserts of uni-body, end entry design for KITZ 150 / 300 SCTAZM / UTAZM Series are threaded into the valve body with provision of unthreading for valve disassembly in case of maintenance operation.

KITZ 150 / 300 SCTAZM / UTAZM Series
Single Reduced Bore, Uni-body, End Entry Ball Valves

This is an illustrated cross-section of a typical KITZ regular port, uni-body, floating type ball valve to exhibit the basic design concept
The actual design of a valve may be slightly different from this illustration, depending on its size and pressure class.

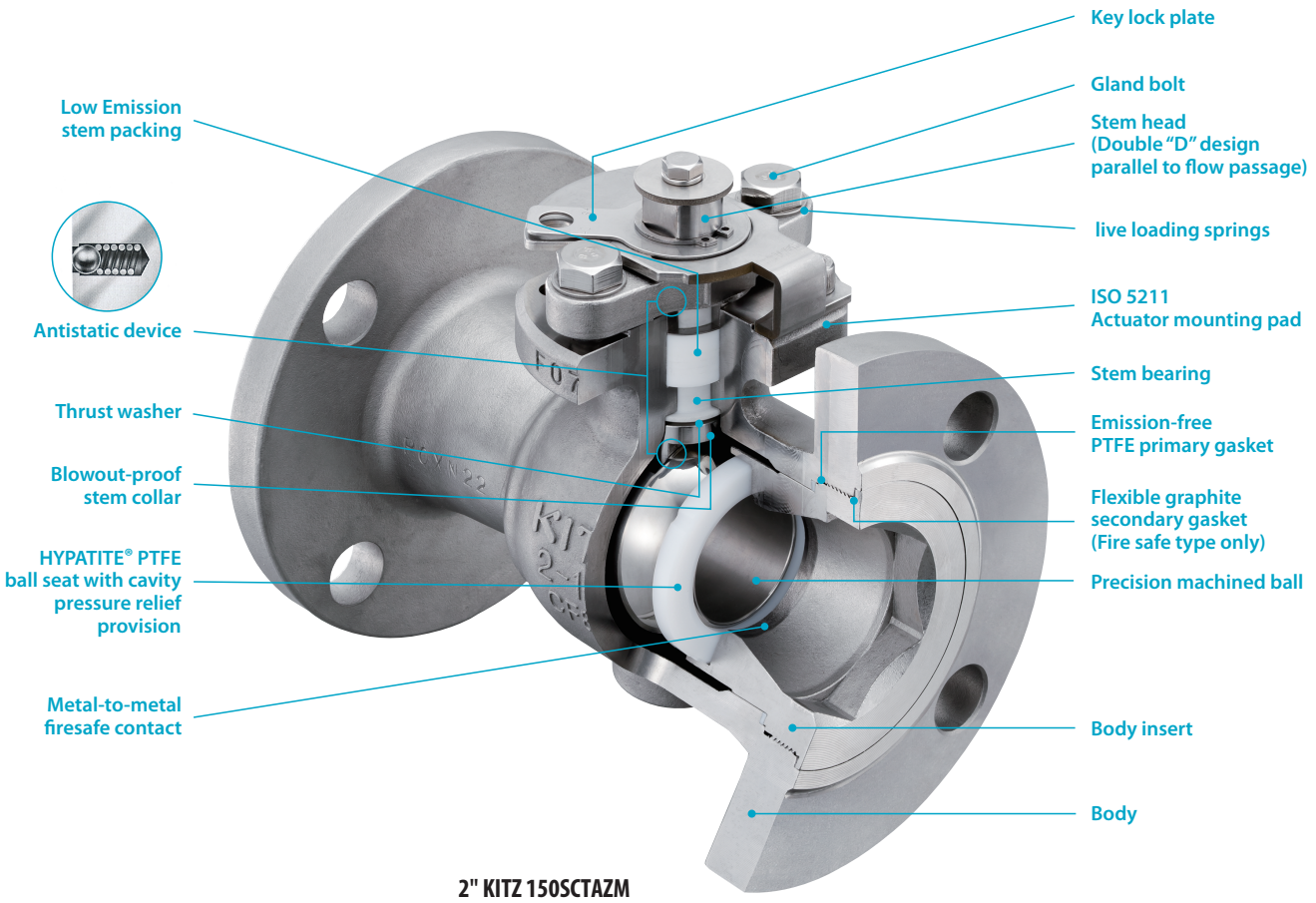

2" KITZ 150SCTAZM

Extensive safety considerations

KITZ ball valves are designed with extensive safety considerations for users. Blow-out proof stems, Secure OPEN and CLOSED locking devices and prevention of misalignment of lever handles provide safe handling in the field and trouble-free operation in the plant.
Antistatic devices, firesafe seal design and cavity pressure relief features all assure the economic benefits of smooth, steady plant operation. KITZ advancements in low emission design features contribute to the global battle against fugitive emissions while greatly reducing costs caused by product loss.

For sour service

Hardness of body, body cap/insert, ball and stem material of KITZ Class 150/300 steel ball valves are controlled by appropriate heat treatment and conformed to the hardness requirements in NACE MR0103, as standard.
In addition to the above, following requirements are optionally available.
-Bolting for valves exposed to sour environment.
-NACE requirements for Class 600 and higher steel ball valves.
Please contact KITZ for those requirements.

Seven Safety Considerations for KITZ 150 / 300 SCTDZM / UTDZM and 150 / 300 SCTAZM / UTAZM Series Ball Valves

1. **Double "D"** stem head design provides mounting of the lever handle always in parallel to the flow passage. Misalignment of the handle is thus prevented. (Fig. 1)

2. The lower end of the stem is designed with an integral collar to be **blowout-proof**. It also functions as the backseat for assured stem sealing. (Fig. 2)

3. An **antistatic feature** is provided to ensure electrical continuity between ball, stem, and body. (Fig. 2)

4. Facility for mounting a **locking device** for prevention of accidental valve operation is provided.

5. **Plant fires** are a serious concern for soft-seated ball valves because of possible fluid leakage and consequent increase of the fire magnitude caused by deterioration of resilient sealing materials.

   KITZ ball valves are engineered for fire safety and successfully **fire tested** to minimize both external and internal fluid leakage after plant fires. They have **post-fire metal-to-metal contact** of all sealing areas such as:

   - Contact between ball and valve shell (Fig. 3 & 4)
   - Contact between stem and valve shell (Fig. 5 & 6)
   - Valve shell coupling flanges of split body design (Fig. 7 & 8)
   - Contact between valve body and insert of uni-body design (Fig. 9)

   The problem of external fluid leakage is more serious than internal leakage through the valve bore because of the fear of fueling the fire. To prevent this, KITZ ball valves may be ordered with **flexible graphite packing** and **gaskets**, which are extremely heat resistant, and not affected by the fire. For details, refer to Page 145 and 146.

6. The surface of stem and stuffing box, and interface clearance of stem-to-gland, stem-to-stem bearing and gland-to-stuffing box are precision controlled on machining and assembly for **low emission service**. Materials and design of PTFE or flexible graphite packing and gasket are also carefully selected to minimize leakage of line fluid into the atmosphere. Refer to Page 145 and 146 for more information.

7. A provision for **cavity pressure relief** is incorporated into the precision engineered KITZ **HYPATITE®** PTFE ball seats for the ultimate safety. Refer to Page 10 for details.

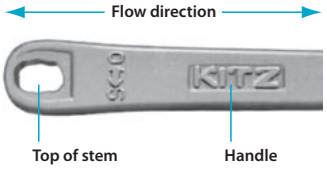

Fig. 1

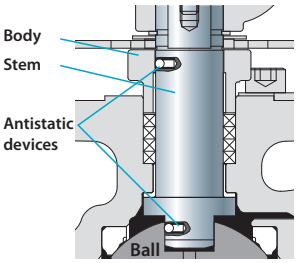

Fig. 2

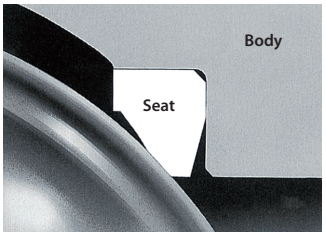

Fig. 3 (Before fire)

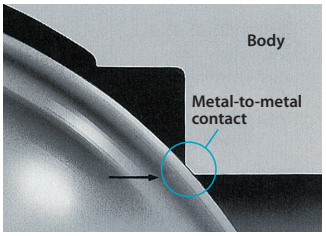

Fig. 4 (After fire)

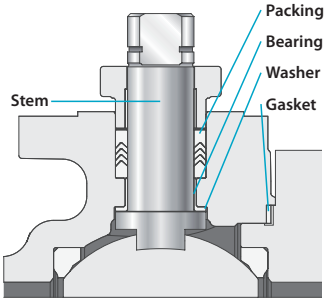

Fig. 5 (Before fire)

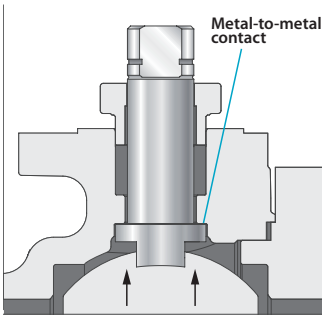

Fig. 6 (After fire)

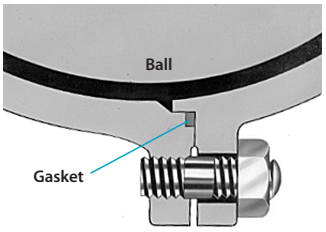

Fig. 7 (Before fire)

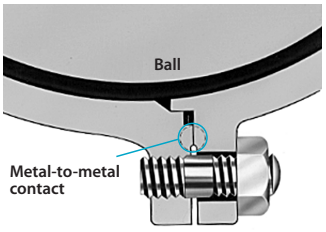

Fig. 8 (After fire)

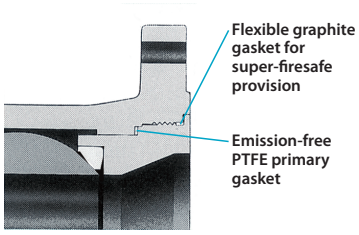

Fig. 9 (Uni-body insert)

As the primary body seal, emission free PTFE gasket is always provided.
A Flexible graphite gasket isused as a secondary body seal for firesafe provision.

ISO 5211 Actuator Mounting Pads

KITZ 150 / 300 SCTDZM / UTDZM Series and 150 / 300 SCTAZM / UTAZM Series ball valves are furnished with an integral actuator mounting pad designed and factory-drilled according to ISO 5211 specification. This easily and uniformly enables mounting of any actuators provided with ISO 5211 valve mounting flanges. Mounting pad also conforms to CAPI design standard.

Note: Customers are requested to prepare mounting brackets and connectors for the actuators chosen for their valve automation. Actuators can be mounted on KITZ ball valves without disassembly of valve glands.

Actuator mounting pad

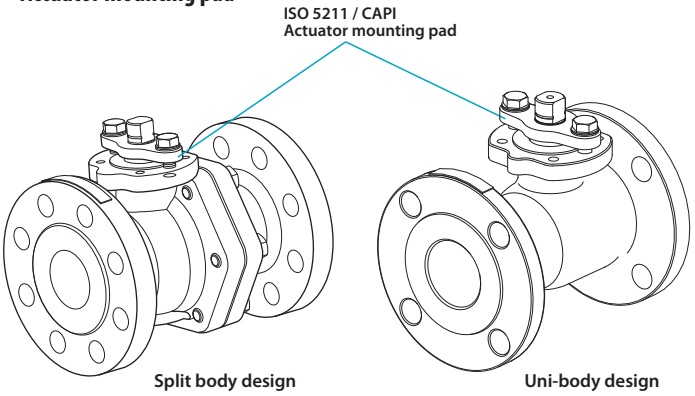

HYPATITE® PTFE Ball Seats

KITZ ball valves are furnished, as the manufacturer's standard, with HYPATITE® PTFE ball seats made of denatured PTFE, a molecularly reinforced PTFE copolymer, and specially engineered for high performance which include:

A typical HYPATITE® PTFE seat used for 4" KITZ 150 SCTDZM ball valves.

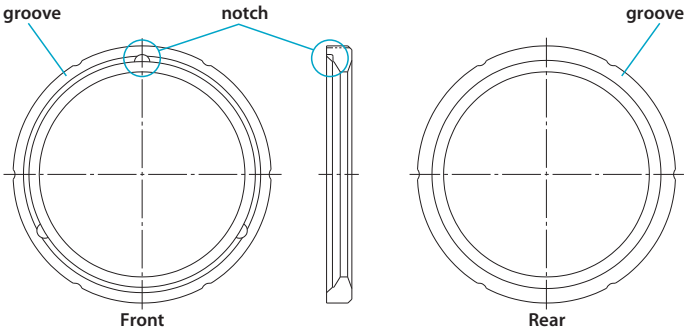

- **Wide service temperature range of -20°F through 518°F.**
  This is for standard valve design and materials used for medium to high temperature services. The lower temperature range can be extended down to -321°F by means of extended bonnet design and special low temperature service materials.
- **High chemical resistance is egual to PTFE.**
- **Monomer permeability is lower than other PTFE materials.**
- **Resistance against compression and creeping (cold flow) is higher than other PTFE materials to guarantee long life cycle.**
- **Specific gravity and friction coefficient are equal to those of virgin PTFE for smooth valve operation.**
- **Purity of processed products is guaranteed as highly as virgin PTFE.**
- **Resiliency is as high as other PTFE materials for bubble-tight sealing performance.**

Refer to Page 149 and 150 for more technical data.

Optional Ball Seats

In addition to the standard HYPATITE® PTFE ball seats, PFA seats are recommended for monomer service. Also virgin PTFE and carbon filled PTFE seats are optionally available for versatility in service applications.

Cavity Pressure Relief

Some line fluid is usually left trapped inside the ball-body cavity. This fluid can expand under the influence of high ambient or line temperature. An abnormal increase in cavity pressure can damage the valve seats or balls, unless the valve has an adequate cavity pressure relief provision. Trunnion mounted ball valves provide protection from this problem with standard seat configuration. Refer to KITZ Cat. No. K-202 for technical details of KITZ trunnion mounted ball valves.

In case of floating ball valves, however, their rather simple seating principle requires some special protection from excessive cavity pressure rise when highly volatile liquid service is subject to frequent and large temperature variation, while the valve is not frequently operated. KITZ 150 / 300 SCTDZM / UTDZM and 150 / 300 SCTAZM / UTAZM Series ball valves offer self-relieving of excessive cavity pressure as a standard feature engineered in HYPATITE® ball seats.

Other general solutions for floating ball valves include employment of automatic pressure relief valves or drilling pressure equalization holes on the ball. If the requirement of automatic cavity pressure relief is as critical as in chlorine service, be sure to contact KITZ Corporation or its distributors for technical advise.

Low Emission Design Features for KITZ 150 / 300 SCTDZM / UTDZM and 150 / 300 SCTAZM / UTAZM Series Ball Valves

KITZ high engineered sealing design achieves superior fugitive emission performance. ISO 15848-1qualified.

KITZ precise laboratory tests and various field experiences achieve the optimized new stem sealing design for superior fugitive emission performance. That is proven on the certificate of ISO 15848-1 Tightness Class BH qualification test, witnessed by Bureau Veritas. This is KITZ standard specification for Class 150 and 300 flanged floating ball valves,identified as 150 / 300 UTDZ / SCTDZ Series (split body) · 150 / 300 UTAZ / SCTAZ Series (uni- body) in this catalog.

ISO 15848-1 Qualification

Class	Series	Body Type	Seat	Packing/Gasket	Tightness Class	Temperature Class	Endurance Class
150 300	SCTDZM・UTDZM	Split-body	HYPATITE® PTFE	PTFE	B *1	-29℃～200℃ (-20°F～392°F)	CO 3 *2
	SCTAZM・UTAZM	Uni-body					
	SCTDZM-FS・UTDZM-FS	Split-body	HYPATITE® PTFE	Flexible Graphite	B *1	-29℃～200℃ (-20°F～392°F)	CO 3 *2
	SCTAZM-FS・UTAZM-FS	Uni-body					

*1 ISO 15848-1 remarks that tightness class A typically achieved with bellow seals, class B with PTFE packing and class C with flexible graphite packing.
*2 CO 3 includes 2,500 cycle operation and 4 times thermal cycle.

CAA / EPA Method 21 (40 CFR. 60 Appendix A)

The US Federal Clean Air Act requires all plants handling the toxic gases and chemicals listed by the Environmental Protection Agency (EPA) to periodically monitor their plant equipment for detection of fugitive emissions exceeding criteria, and repair or replace all defective equipment immediately.
The criteria of emission are categorized in detail by the emission sources (equipment) and/or listed fluid type.
Some state regulations, such as California, require more stringent emission control that is reaching 50 ppm maximum leak level.
KITZ low emission service ball valves are designed, engineered, manufactured and tested to meet these emission level as standard product for KITZ 150 / 300 UTDZ / SCTDZ and UTAZ / SCTAZ Series Ball Valves.
Our low emission valve performance and laboratory test results are shown on the below table*1.

Laboratory Test Results

Class	Series	Body Type	Seat	Packing/Gasket	Maximum leak level on new valve	Test result after 10,000cycle operation
150 300	SCTDZM・UTDZM	Split-body	HYPATITE® PTFE	PTFE	20ppm	50ppm*2
	SCTAZM・UTAZM	Uni-body				
	SCTDZM-FS・UTDZM-FS	Split-body	HYPATITE® PTFE	Flexible Graphite	50ppm	50ppm*2
	SCTAZM-FS・UTAZM-FS	Uni-body				

*1 Maximum leak level guaranteed for the duration of the KITZ warranty in North America for emission monitoring with EPA Method 21 procedures and methane-calibrated organic vapor analyzers.
*2 Maximum leak level was measured with clean fluid at ambient room temperature, and with adequate gland bolts retightening according to KITZ maintenance manual.

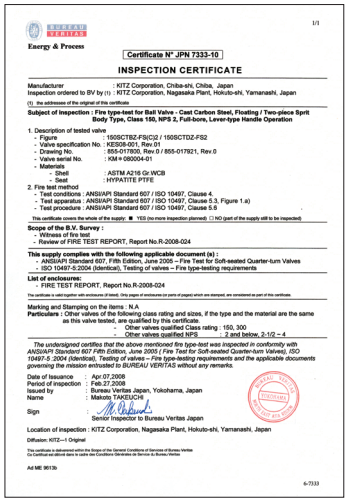

BUREAU VERITAS
Energy & Process

1/1

Certificate N° JPN 7333-10

INSPECTION CERTIFICATE

Manufacturer : KITZ Corporation, Chiba-shi, Chiba, Japan
Inspection ordered to BV by (1) : KITZ Corporation, Nagasaka Plant, Hokuto-shi, Yamanashi, Japan

(1) the addressee of the original of this certificate

Subject of inspection : Fire type-test for Ball Valve - Cast Carbon Steel, Floating / Two-piece Sprit Body Type, Class 150, NPS 2, Full-bore, Lever-type Handle Operation

1. Description of tested valve
- Figure : 150SCTBZ-FS(C)2 / 150SCTDZ-FS2
- Valve specification No. : KZ0G9-001, Rev.01
- Drawing No. : 855-017800, Rev.0 / 855-017921, Rev.0
- Valve serial No. : KM = 080004-01
- Materials
  - Shell : ASTM A216 Gr WCB
  - Seat : HYPATITE PTFE

2. Fire test method
- Test conditions : ANSI/API Standard 607 / ISO 10497, Clause 4.
- Test apparatus : ANSI/API Standard 607 / ISO 10497, Clause 5.3, Figure 1.a)
- Test procedure : ANSI/API Standard 607 / ISO 10497, Clause 5.6

This certificate covers the whole of the supply: ■ YES (no more inspection planned) ☐ NO (part of the supply still to be inspected)

Scope of the B.V. Survey :
- Witness of fire test
- Review of FIRE TEST REPORT, Report No.R-2008-024

This supply complies with the following applicable document (s) :
- ANSI/API Standard 607, Fifth Edition, June 2005 – Fire Test for Soft-seated Quarter-turn Valves
- ISO 10497-5:2004 (Identical), Testing of valves – Fire type-testing requirements

List of enclosures:
- FIRE TEST REPORT, Report No.R-2008-024

The certificate is valid together with enclosures (if listed). Only pages of enclosures (or parts of pages) which are stamped, are considered as part of this certificate.

Marking and Stamping on the items : N.A
Particulars : Other valves of the following class rating and sizes, if the type and the material are the same as this valve tested, are qualified by this certificate.
- Other valves qualified Class rating : 150, 300
- Other valves qualified NPS : 2 and below, 2-1/2 ~ 4

The undersigned certifies that the above mentioned fire type-test was inspected in conformity with ANSI/API Standard 607 Fifth Edition, June 2005 (Fire Test for Soft-seated Quarter-turn Valves), ISO 10497-5 :2004 (Identical), Testing of valves – Fire type-testing requirements and the applicable documents governing the mission entrusted to BUREAU VERITAS without any remarks.

Date of Issuance : Apr.07,2008
Period of inspection : Feb.27,2008
Issued by : Bureau Veritas Japan, Yokohama, Japan
Name : Makoto TAKIZUCHI
Sign : Senior Inspector to Bureau Veritas Japan

Location of inspection : KITZ Corporation, Nagasaka Plant, Hokuto-shi, Yamanashi, Japan

Diffusion: KITZ—1 Original

This certificate is delivered within the Scope of the General Conditions of Services of Bureau Veritas
Ce Certificat est délivré dans le cadre des Conditions Générales de Service du Bureau Veritas

Ad ME 9613b

6-7333

ISO 15848-1Certificate

Major design considerations for having upgraded our standard valves to the low emission performer are introduced below:

Diametrical interface clearance

The diametrical is strictly controlled to prevent the line fluid from leaking into the atmosphere through these potential leak paths.

The optimum diametrical clearance is realized on the following area by high precision machining.

- Gland and Stem
- Gland and Stuffing Box
- Stem and Bearing

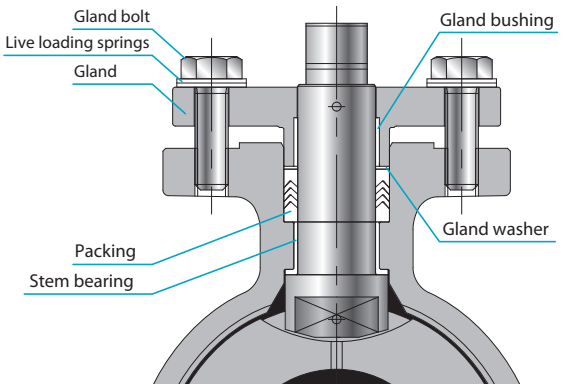

Stem seal mechanism for 150/300SCTDZM/UTDZM2 1/2" and larger , 150/300SCTAZM/UTAZM2" and larger.

Stem

The stem surface finish is controlled according to KITZ design and manufacturing standards. This specification is particularly important for flexible graphite packing, because, while the stem travels through the packing rings, graphite tends to fill micro scratches on the stem surface and migrates to the stem to function as a lubricant. Too fine a stem smoothness loses this advantage and can increase leakage. The stem straightness and roundness are also controlled according to our design and manufacturing standards.

Stuffing box

The surface finish is according to KITZ design and manufacturing standards. Contrary to the stem, the stuffing box wall statically contacts packing rings, and a reasonably rougher surface finish results in a better sealing performance. The cylindricity and verticality are precision controlled according to KITZ design and manufacturing standards.

Gasket

PTFE gasket is used for standard version. Graphite gasket is used for the optional fire safe version and high temperature low emission service respectively. The gasket contact faces of valve shells are precision machined to further upgrade the sealing function of the valve shell joint.

Gland packing

Sealing performance is improved with the new V-ring.
Flexible sealing performance is achieved by using V-packing with a unique shape. This prevents leaking from around the stem and makes long-term use possible.

Live loading spring

Maintaining V-packing stress (1)
The live loading springs provided on the gland bolts prevent reductions in sealing performance caused by the relaxation of V-packing stress.

Gland washer

Maintaining V-packing stress (2)
Gland washers (made with INCONEL® 718 or Equivalent) are installed on top of the V-packing.
These washers firmly hold down the entire surface of the V-packing and this prevents relaxation of stress caused by deformation of the V-packing.

Gland bushing & Stem bearing

Double support for the bearing function
A gland bushing and stem bearing are provided above and below the axis, which strengthens the axis area that is vital for valve operation. This creates improved durability and operability.

KITZ General Term of Warranty for Low Emission Service Valves

Warranty Period

12 months after placement in service, but not exceeding 18 months after shipment from KITZ factories.

Warranty Conditions

1. Proper storage and maintenance of valves prior to installation, according to the KITZ maintenance manual.
2. Proper handling of valves during transportation and plant construction, which includes sandblasting and painting, for protection of exposed stems and glands of valves.
3. **Need of adequate retightening of gland packing sets*** according to the KITZ maintenance manual to reduce the leak level, when an excessive level of fugitive emission is detected during:
   a) Pre-installation valve inspection
   b) Process pilot run or start-up operation
   c) Periodic or occasional inspection of valves in service
4. **Valve stems must be kept free of scratches, scars or corrosion.**
5. Following all other instructions provided in the KITZ maintenance and operation manuals.

* This condition is particularly important when valves are subjected to thermal cycles on the site. Users are recommended to ensure that packing is retightened after every cool-down of the process.

Pressure-Temperature Ratings

The pressure-temperature ratings of ball valves are determined, not only by valve shell materials, but more essentially by sealing materials used for ball seats, gland packing and gaskets. Sealing materials may be high molecule plastics or rubbers, but the choice is limited by the characteristics of the service fluid, working temperatures, working pressures, velocity of fluid, and operational frequency of valves.

As it is very difficult to predetermine the exact pressure-temperature rating for all kinds of fluid under all imaginable conditions, we have prepared general rating charts for non-shock fluid service here, based on our past experiences both in the field and in our laboratory.
In case of extraordinary service conditions as mentioned below, contact KITZ Corporation or its distributors for technical advice:

1. Valves shall be left fully closed for a long period of time under high temperature or high differential pressure.
2. Valves shall be frequently operated under high temperature or high differential pressure.
3. Frequent change of line pressure or temperature.

Seat materials Ⓐ: Virgin PTFE Ⓑ : HYPATITE® PTFE, Carbon-filled PTFE. HYPATITE® is the standard seat material for KITZ ball valves. Specify virgin PTFE or carbon-filled PTFE when required. The body pressure ratings shown here are for ASTM A216 Gr. WCB. For the pressure ratings of other valve shell materials, refer to the latest edition of ASME B16.34.

TDZ Series : 1/2", 3/4"

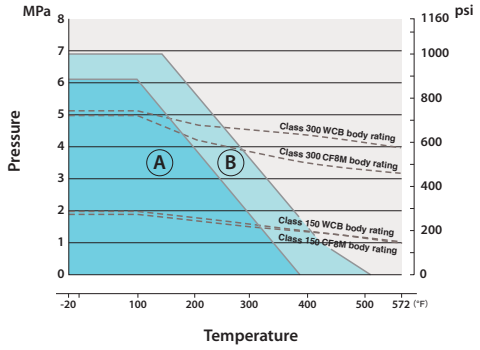

TDZ Series : 1"～2 1/2"

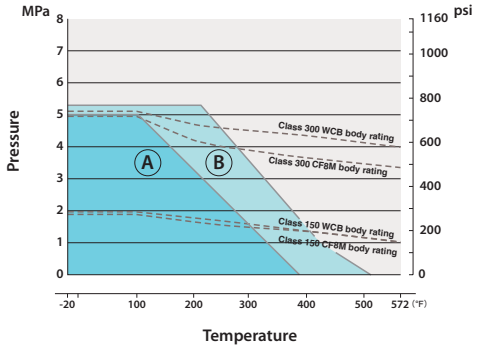

TDZ Series : 3" , 4"

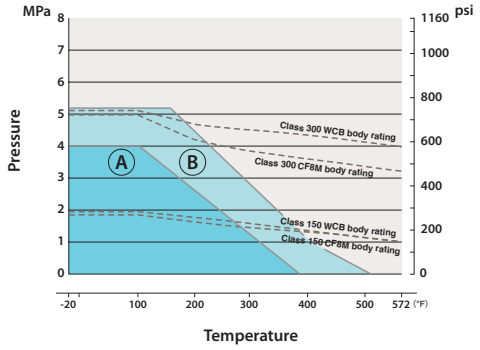

TDZ Series : 5" , 6"

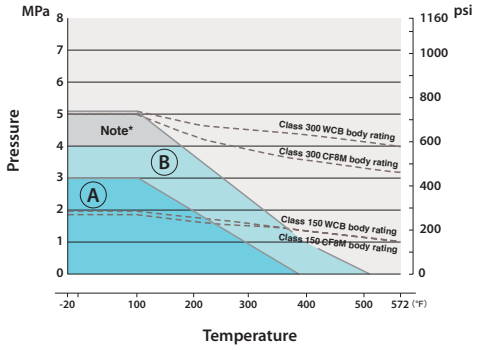

TDZ Series : 8" , 10"

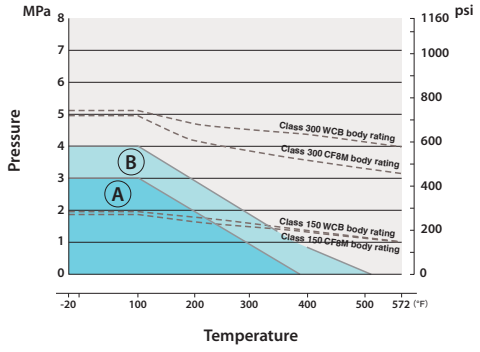

Note* Continuous service in high differential pressure exceeding 580psig for these valves may cause ball seat degradation or shortening life. Trunnion mounted ball valve would be recommended for following services.

1) Alternate pressurization from both valve end exceeding 580psig
2) Both high (exceeding 580psig) and low (less than 145psig) pressure tight shut off required services.
3) Frequent breakaway operations over 500times under the high differential pressure exceeding 580psig.

TAZ Series : 1/2"～ 1"

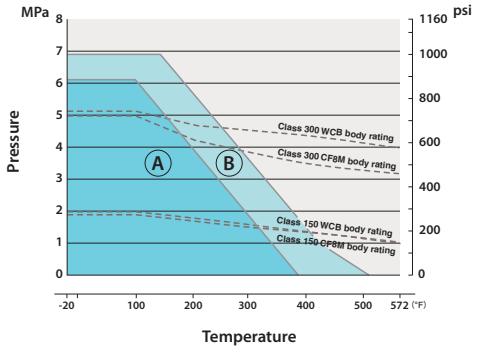

TAZ Series : 1 1/2"～ 3"

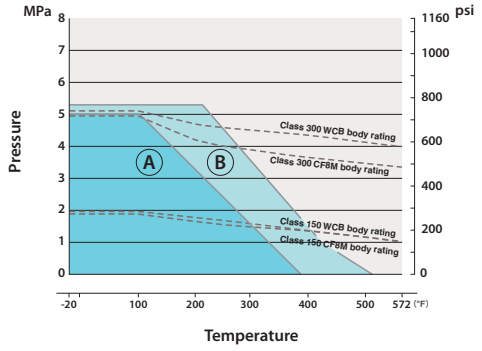

TAZ Series : 4" , 6"

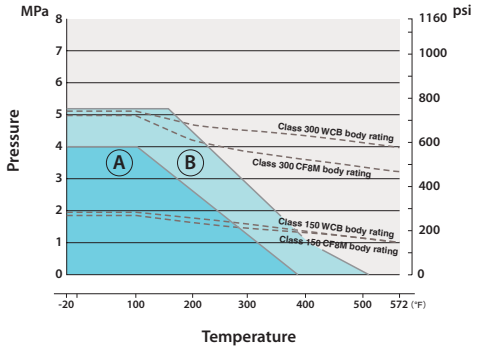

TAZ Series : 8" , 10"

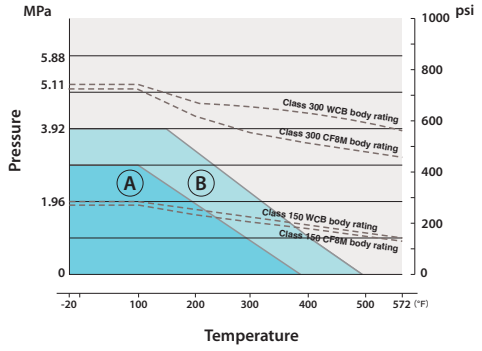

Class 600 / 1500 SCTBM · UTBM

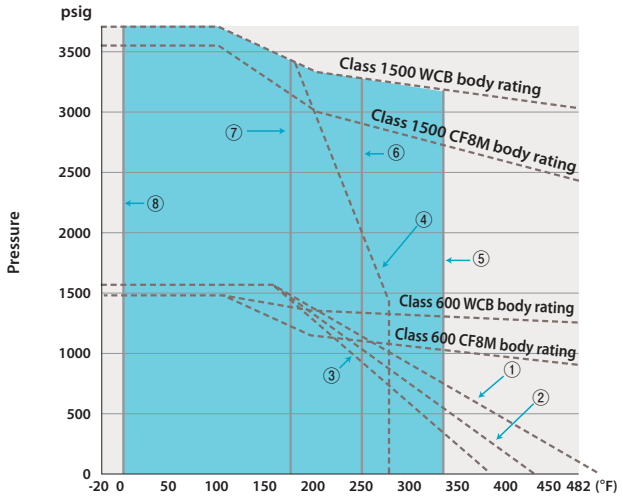

Ball Seat Materials

① KITZ HYPATITE® or Carbon-filled PTFE
② Glass-filled PTFE with MoS_2
③ Virgin PTFE
④ Nylon with MoS_2

O-ring Upper Limit

⑤ (1) FKM
(2) Low-temperature FKM
⑥ (1) EPDM
(2) ECO (Epichlorohydrin Copolymer)
⑦ (1) NBR
(2) Low-temperature NBR

O-ring Lower Limit *

⑧ FKM

* O-rings made of others than FKM can withstand -20°F.

Type 1500 / 1000 SC3THZM · U3THZM SC3TFZM · U3TFZM

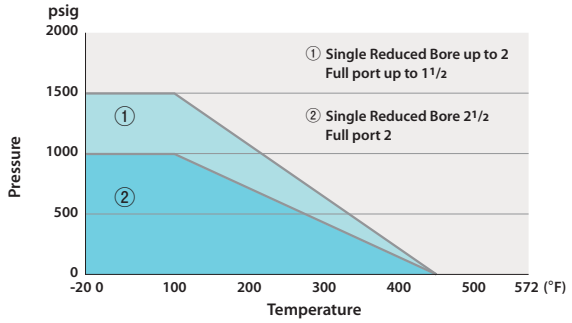

Type 2000 / 1500 SCTKZM · UTKZM SCTHZM · UTHZM SCTHWZM · UTHWZM

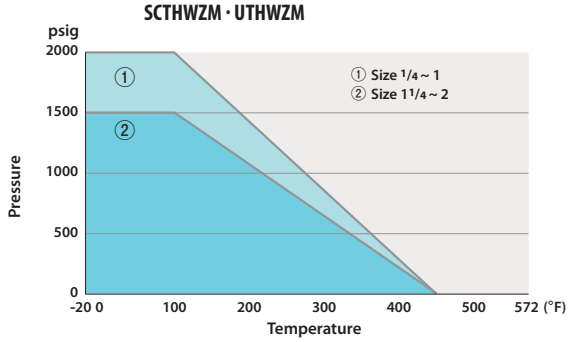

Type 800 UTHM Type 1000 UTFM

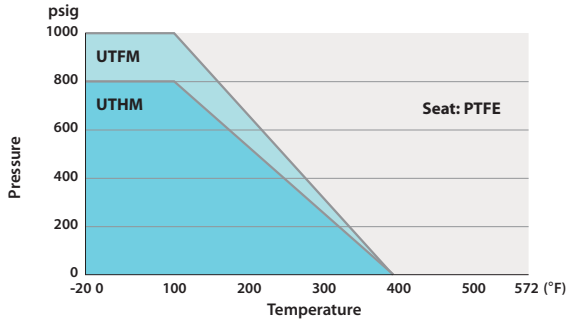

Type 600 UTKM · SCTKM

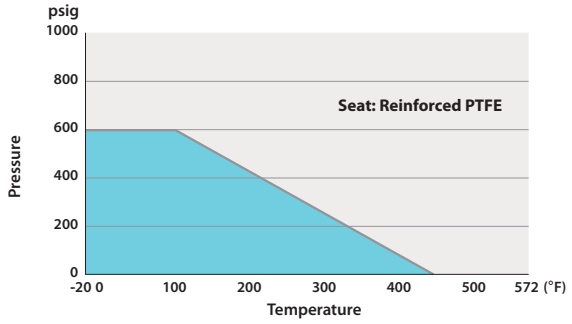

150SCTDZM
150SCTDZM-FS

KITZ

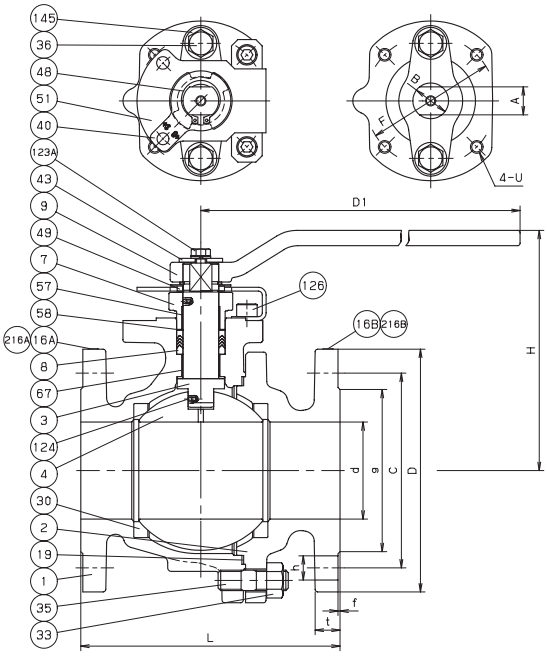

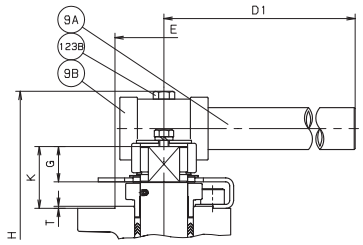

SIZE 6& OVER

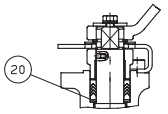

UP TO SIZE 1

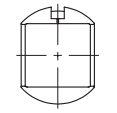

SIZE 5, 6

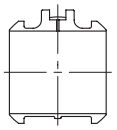

SIZE 8 ONLY
CORED CAVITY

MATERIAL LIST

No.	Name of Parts	Materials
1	BODY	A216 Gr. WCB
2	BODY CAP	A216 Gr. WCB
3	STEM	A276 TYPE316
4	BALL	A276 TYPE316 or A351 Gr. CF8M
7	GLAND	A351 Gr. CF8
8	GLAND PACKIING	150SCTDZM
		PTFE
		150SCTDZM-FS
		FLEXIBLE GRAPHITE
9	HANDLE	DUCTILE IRON(UP TO SIZE 5)
9 A	HANDLE BAR	CARBON STEEL(SIZE 6 & OVER)
9 B	HANDLE HEAD	DUCTILE IRON(SIZE 6 & OVER)
16 A	NAME PLATE	A276 TYPE304
16 B	LEV PLATE	A276 TYPE304
19	GASKET	150SCTDZM
		PTFE
		150SCTDZM-FS
		FLEXIBLE GRAPHITE
20	PACKING WASHER	A276 TYPE316L(UP TO SIZE 1)
30	BALL SEAT	HYPATITE® PTFE
33	CAP NUT	A194 Gr. 2HM
35	CAP BOLT	A193 Gr. B7M
36	GLAND BOLT	STAINLESS STEEL
40	KEYLOCK PLATE	A276 TYPE304
43	HANDLELOCK PLATE	A276 TYPE304
48	SNAP RING	A276 TYPE304
49	STOPPER	A276 TYPE304
51	STOPPER PLATE	A276 TYPE304
57	GLAND BUSHING	G/F PTFE
58	GLAND WASHER	A276 TYPE304
67	STEM BEARING	G/F PTFE
123 A	HANDLELOCK PLATE BOLT	STAINLESS STEEL
123 B	HANDLE BOLT	STAINLESS STEEL
124	SPRING & PIN	A313 & A276 TYPE316
126	STOPPER PLATE BOLT	STAINLESS STEEL
145	CONED DISC SPRINGS	Inconel® 718 or Equivalent
216 A	CE PLATE	A276 TYPE304(SIZE 1 1/2 & OVER)
216 B	ATEX PLATE	A276 TYPE304

DIMENSIONS

Unit : inch

Nominal Size						End Flange								Mounting Dimensions for Actuator								
							Bolt Hole															
in.	mm	d	H	D1	L	D	C	No.	h	Bolt Size	g	t	f	A	B	E	F	G	K	T	U	ISO 5211 Flange Type
1/2	15	0.55	4.25	5.12	4.25	3.50	2.38	4	0.62	1/2	1.38	0.44	0.06	0.36	0.47	0.99	1.42	0.35	0.87	0.04	M5	F03
3/4	20	0.75	4.37	5.12	4.62	3.88	2.75	4	0.62	1/2	1.69	0.44	0.06	0.36	0.47	0.99	1.42	0.35	0.87	0.04	M5	F03
1	25	0.95	4.88	7.09	5.00	4.25	3.12	4	0.62	1/2	2.00	0.44	0.06	0.55	0.71	1.38	1.97	0.55	1.18	0.06	M6	F05
1 1/2	40	1.50	5.28	9.06	6.50	5.00	3.88	4	0.62	1/2	2.88	0.56	0.06	0.67	0.87	2.17	2.76	0.67	1.34	0.06	M8	F07
2	50	1.97	5.63	9.06	7.00	6.00	4.75	4	0.75	5/8	3.62	0.62	0.06	0.67	0.87	2.17	2.76	0.67	1.34	0.06	M8	F07
2 1/2	65	2.52	7.05	15.75	7.50	7.00	5.50	4	0.75	5/8	4.12	0.69	0.06	0.87	1.10	2.76	4.02	0.87	1.77	0.08	M10	F10
3	80	3.00	7.44	15.75	8.00	7.50	6.00	4	0.75	5/8	5.00	0.75	0.06	0.87	1.10	2.76	4.02	0.87	1.77	0.08	M10	F10
4	100	3.94	8.82	18.11	9.00	9.00	7.50	8	0.75	5/8	6.19	0.94	0.06	1.06	1.42	3.35	4.92	1.06	2.05	0.08	M12	F12
5	125	4.84	9.45	18.11	14.00	10.00	8.50	8	0.88	3/4	7.31	0.94	0.06	1.06	1.42	3.35	4.92	1.06	2.05	0.08	M12	F12
6	150	5.95	12.40	39.37	15.50	11.00	9.50	8	0.88	3/4	8.50	1.00	0.06	1.42	1.89	3.94	5.51	1.42	2.48	0.08	M16	F14
8	200	7.95	15.98	59.06	18.00	13.50	11.75	8	0.88	3/4	10.62	1.12	0.06	1.81	2.36	5.12	6.50	1.81	3.11	0.08	M20	F16

G-150SCTDZM
G-150SCTDZM-FS

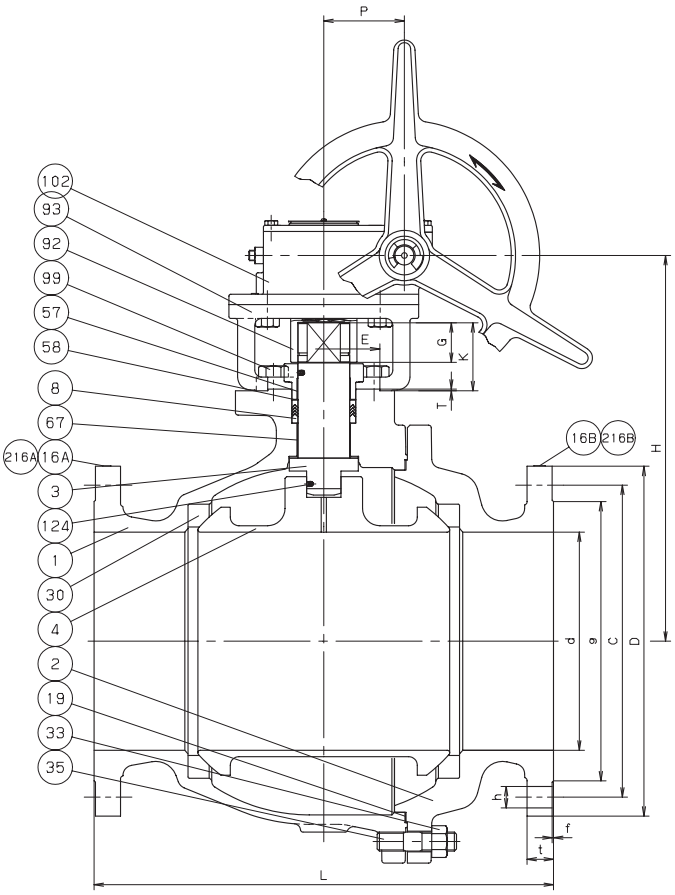

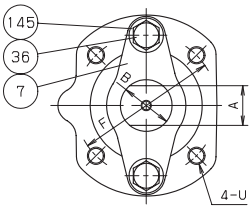

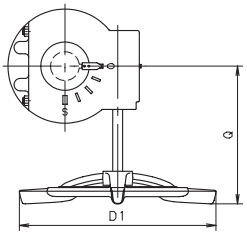

MATERIAL LIST

No.	Name of Parts	Materials
1	BODY	A216 Gr. WCB
2	BODY CAP	A216 Gr. WCB
3	STEM	A276 TYPE316
4	BALL	A351 Gr. CF8M
7	GLAND	A351 Gr. CF8
8	GLAND PACKIING	G-150SCTDZM(C)
		PTFE
		G-150SCTDZM-FS(C)
		FLEXIBLE GRAPHITE
16 A	NAME PLATE	A276 TYPE304
16 B	LEV PLATE	A276 TYPE304
19	GASKET	G-150SCTDZM(C)
		PTFE
		G-150SCTDZM-FS(C)
		FLEXIBLE GRAPHITE
30	BALL SEAT	HYPATITE® PTFE
33	CAP NUT	A194 Gr. 2HM
35	CAP BOLT	A193 Gr. B7M
36	GLAND BOLT	STAINLESS STEEL
57	GLAND BUSHING	G/F PTFE
58	GLAND WASHER	A276 TYPE304
67	STEM BEARING	G/F PTFE
92	CONNECTOR	CARBON STEEL
93	BRAKET	DUCTILE IRON
99	BOLT	STAINLESS STTEL
102	GEAR UNIT	
124	SPRING & PIN	A313 & A276 TYPE316
145	CONED DISC SPRINGS	Inconel® 718 or Equivalent
216 A	CE PLATE	A276 TYPE304
216 B	ATEX PLATE	A276 TYPE304

DIMENSIONS

Unit : inch

Nominal Size						End Flange								Mounting Dimensions for Actuator										
							Bolt Hole																	
in.	mm	d	H	D1	L	D	C	No.	h	Bolt Size	g	t	f	P	Q	A	B	E	F	G	K	T	U	ISO 5211 Flange Type
10	250	9.96	17.64	19.69	21.00	16.00	14.25	12	1.00	7/8	12.75	1.19	0.06	3.68	14.29	1.81	2.36	5.12	6.50	1.81	3.07	0.08	M20	F16

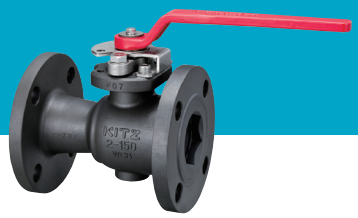

150SCTAZM
150SCTAZM-FS

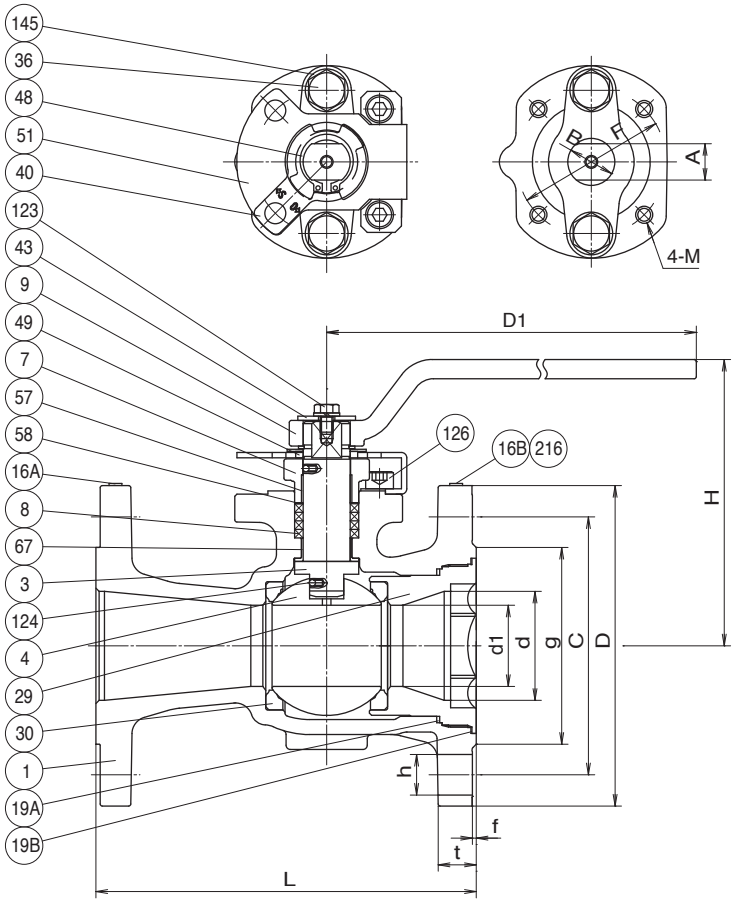

MATERIAL LIST

No.	Name of Parts	Materials
1	BODY	A216 Gr. WCB
3	STEM	A276 TYPE316
4	BALL	A276 TYPE316 or A351 Gr. CF8M
7	GLAND	A351 Gr. CF8
8	GLAND PACKIING	150SCTAZM
		PTFE
		150SCTAZM-FS
		FLEXIBLE GRAPHITE
9	HANDLE	DUCTILE IRON
16A	NAME PLATE	STAINLESS STEEL
16B	LEV PLATE	STAINLESS STEEL
19A	GASKET	PTFE
19B	GASKET	150SCTAZM-FS
		FLEXIBLE GRAPHITE
20	PACKING WASHER	A276 TYPE316L
29	INSERT	A216 Gr. WCB or A105N
30	BALL SEAT	HYPATITE® PTFE
36	GLAND BOLT	STAINLESS STEEL
40	KEYLOCK PLATE	STAINLESS STEEL
43	HANDLELOCK PLATE	STAINLESS STEEL
48	SNAP RING	STAINLESS STEEL
49	STOPPER	STAINLESS STEEL
51	STOPPER PLATE	STAINLESS STEEL
57	GLAND BUSHING	G/F PTFE
58	GLAND WASHER	A276 TYPE304
67	STEM BEARING	G/F PTFE
123	HANDLELOCK PLATE BOLT	STAINLESS STEEL
124	SPRING & PIN	A313 & A276 TYPE316
126	STOPPER PLATE BOLT	STAINLESS STEEL
145	CONED DISC SPRINGS	INCONEL® 718 or EQUIVALENT
216	ATEX PLATE	STAINLESS STEEL

NOTE

(1) Dimensions A and B are in accordance with CAPI F03-S

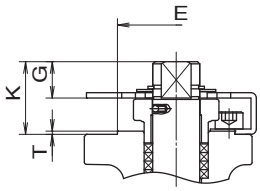

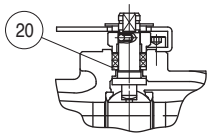

SIZE 1/2,3/4

DIMENSIONS

Unit : inch

Nominal Size							End Flange								Mounting Dimensions for Actuator								
								Bolt Hole															
in.	mm	d	d1	H	D1	L	D	C	No.	h	Bolt Size	g	t	f	A	B	E	F	G	K	T	M	ISO 5211 Flange Type
1/2	15	0.49	0.39	3.62	5.12	4.25	3.50	2.38	4	0.62	1/2	1.38	0.44	0.06	0.276	0.394	0.985	1.417	0.33	0.71	0.04	M5	F03(1)
3/4	20	0.75	0.49	3.74	5.12	4.62	3.88	2.75	4	0.62	1/2	1.69	0.44	0.06	0.276	0.394	0.985	1.417	0.33	0.71	0.04	M5	F03(1)
1	25	0.98	0.69	4.33	5.12	5.00	4.25	3.12	4	0.62	1/2	2.00	0.44	0.06	0.355	0.473	0.985	1.417	0.35	0.87	0.04	M5	F03

150SCTAZM
150SCTAZM-FS

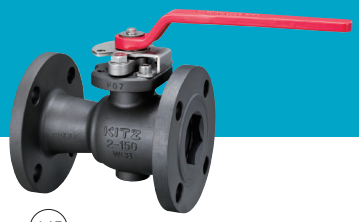

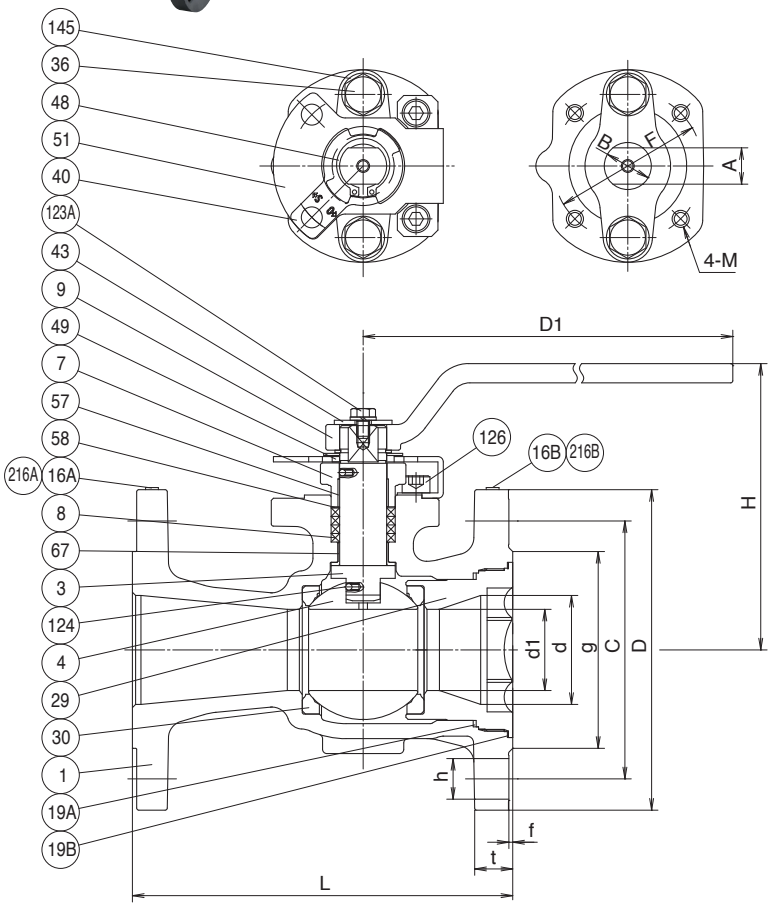

MATERIAL LIST

No.	Name of Parts	Materials
1	BODY	A216 Gr. WCB
3	STEM	A276 TYPE316
4	BALL	A276 TYPE316 or A351 Gr. CF8M
7	GLAND	A351 Gr. CF8
8	GLAND PACKIING	150SCTAZM
		PTFE
		150SCTAZM-FS
		FLEXIBLE GRAPHITE
9	HANDLE	DUCTILE IRON(UP TO SIZE 6)
9A	HANDLE BAR	CARBON STEEL(SIZE 8& OVER)
9B	HANDLE HEAD	DUCTILE IRON(SIZE 8& OVER)
16A	NAME PLATE	STAINLESS STEEL
16B	LEV PLATE	STAINLESS STEEL
19A	GASKET	PTFE
19B	GASKET	150SCTAZM-FS
		FLEXIBLE GRAPHITE
20	PACKING WASHER	A276 TYPE316L(SIZE 1 1/2 ONLY)
29	INSERT	A216 Gr. WCB OR A105N
30	BALL SEAT	HYPATITE® PTFE
36	GLAND BOLT	STAINLESS STEEL
40	KEYLOCK PLATE	STAINLESS STEEL
43	HANDLELOCK PLATE	STAINLESS STEEL
48	SNAP RING	STAINLESS STEEL
49	STOPPER	STAINLESS STEEL
51	STOPPER PLATE	STAINLESS STEEL
57	GLAND BUSHING	G/F PTFE
58	GLAND WASHER	A276 TYPE304
67	STEM BEARING	G/F PTFE
123A	HANDLELOCK PLATE BOLT	STAINLESS STEEL
123B	HANDLE BOLT	STAINLESS STEEL
124	SPRING & PIN	A313 & A276 TYPE316
126	STOPPER PLATE BOLT	STAINLESS STEEL
145	CONED DISC SPRINGS	INCONEL® 718 or EQUIVALENT
216A	CE PLATE	STAINLESS STEEL
216B	ATEX PLATE	STAINLESS STEEL

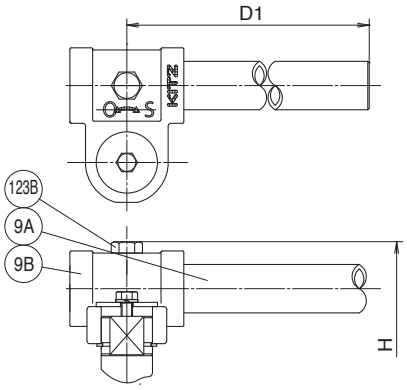

SIZE 8 & OVER

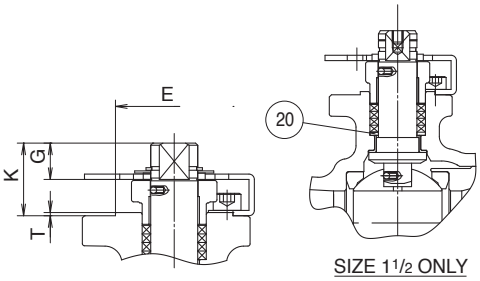

SIZE 1 1/2 ONLY

DIMENSIONS

Unit : inch

Nominal Size							End Flange								Mounting Dimensions for Actuator								
								Bolt Hole															
in.	mm	d	d1	H	D1	L	D	C	No.	h	Bolt Size	g	t	f	A	B	E	F	G	K	T	M	ISO 5211 Flange Type
1 1/2	40	1.50	1.18	5.00	6.30	6.5	5.00	3.88	4	0.62	1/2	2.88	0.56	0.06	0.552	0.709	1.378	1.969	0.55	1.18	0.06	M6	F05
2	50	2.00	1.50	5.28	9.06	7.0	6.00	4.75	4	0.75	5/8	3.62	0.62	0.06	0.670	0.867	2.166	2.756	0.67	1.34	0.06	M8	F07
3	80	3.00	2.99	6.81	15.75	8.0	7.50	6.00	4	0.75	5/8	5.00	0.75	0.06	0.867	1.103	2.756	4.016	0.87	1.77	0.08	M10	F10
4	100	4.00	3.00	7.44	15.75	9.0	9.00	7.50	8	0.75	5/8	6.19	0.94	0.06	0.867	1.103	2.756	4.016	0.87	1.77	0.08	M10	F10
6	150	6.00	3.94	8.82	18.11	10.5	11.00	9.50	8	0.88	3/4	8.50	1.00	0.06	1.063	1.418	3.347	4.921	1.06	2.05	0.08	M12	F12
8	200	8.00	5.94	12.40	39.37	11.5	13.50	11.75	8	0.88	3/4	10.62	1.12	0.06	1.418	1.890	3.937	5.512	1.42	2.48	0.08	M16	F14
10	250	10.00	7.36	15.43	59.00	13.0	16.00	14.25	12	1.00	7/8	12.75	1.16	0.06	1.811	2.367	5.118	6.496	1.81	3.11	0.08	M20	F16

G-150SCTAZM
G-150SCTAZM-FS

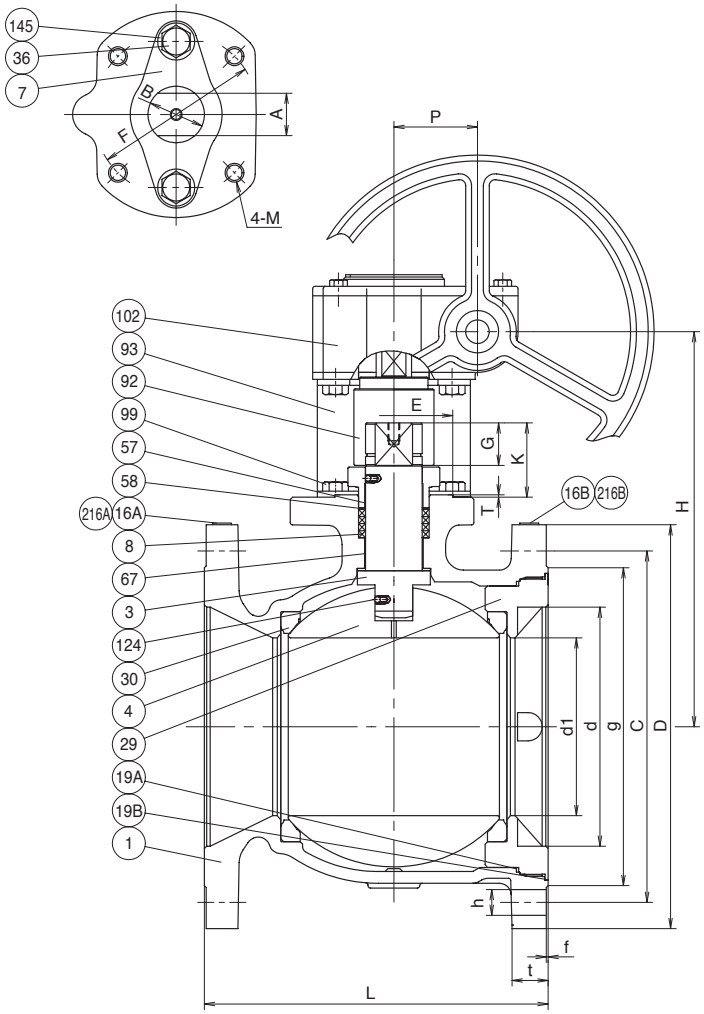

MATERIAL LIST

No.	Name of Parts	Materials
1	BODY	A216 Gr. WCB
3	STEM	A276 TYPE316
4	BALL	A351 Gr. CF8M
7	GLAND	A351 Gr. CF8
8	GLAND PACKIING	G-150SCTAZM
		PTFE
		G-150SCTAZM-FS
		FLEXIBLE GRAPHITE
16A	NAME PLATE	STAINLESS STEEL
16B	LEV PLATE	STAINLESS STEEL
19A	GASKET	PTFE
19B	GASKET	G-150SCTAZM-FS
		FLEXIBLE GRAPHITE
29	INSERT	A216 Gr. WCB or A105N
30	BALL SEAT	HYPATITE® PTFE
36	GLAND BOLT	STAINLESS STEEL
57	GLAND BUSHING	G/F PTFE
58	GLAND WASHER	A276 TYPE304
60	KEY	CARBON STEEL
67	STEM BEARING	G/F PTFE
92	CONNECTOR	CARBON STEEL
93	BRAKET	CARBON STEEL
99	BOLT	CARBON STEEL
102	GEAR UNIT	
124	SPRING & PIN	A313 & A276 TYPE316
145	CONED DISC SPRINGS	INCONEL® 718 or EQUIVALENT
216A	CE PLATE	STAINLESS STEEL
216B	ATEX PLATE	STAINLESS STEEL

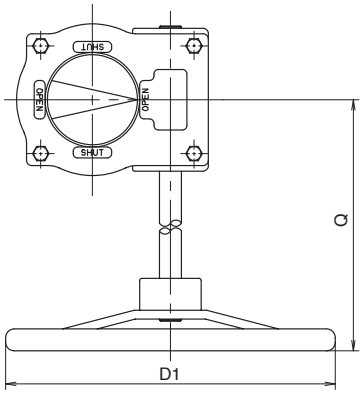

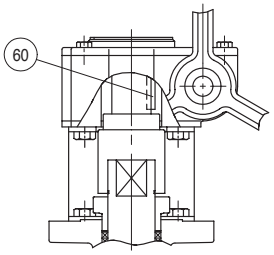

SIZE 10 ONLY

DIMENSIONS

Unit : inch

Nominal Size							End Flange								Mounting Dimensions for Actuator								
								Bolt Hole															
in.	mm	d	d1	H	D1	L	D	C	No.	h	Bolt Size	g	t	f	A	B	E	F	G	K	T	M	ISO 5211 Flange Type
10	250	10.00	7.36	15.75	15.75	13.0	16.00	14.25	12	1.00	7/8	12.75	1.19	0.06	1.811	2.362	5.118	6.496	1.81	3.11	0.08	M20	F16

300SCTDZM
300SCTDZM-FS

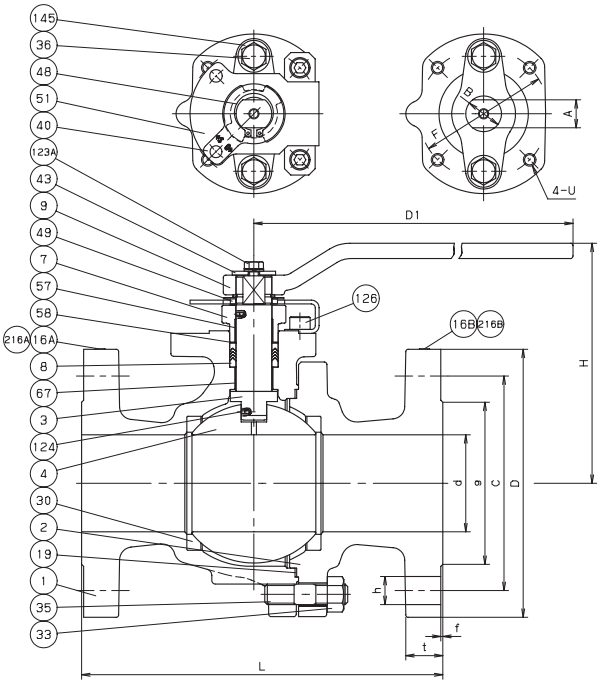

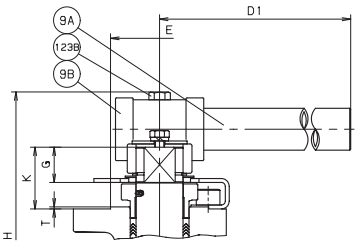

SIZE 4& OVER

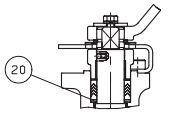

UP TO SIZE 1

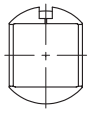

SIZE 6 ONLY

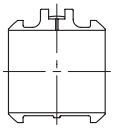

SIZE 8 ONLY
CORED CAVITY

MATERIAL LIST

No.	Name of Parts	Materials
1	BODY	A216 Gr. WCB
2	BODY CAP	A216 Gr. WCB
3	STEM	A276 TYPE316
4	BALL	A276 TYPE316 or A351 Gr. CF8M
7	GLAND	A351 Gr. CF8
8	GLAND PACKIING	300SCTDZM
		PTFE
		300SCTDZM-FS
		FLEXIBLE GRAPHITE
9	HANDLE	DUCTILE IRON(UP TO SIZE 3)
9 A	HANDLE BAR	CARBON STEEL(SIZE 4 & OVER)
9 B	HANDLE HEAD	DUCTILE IRON(SIZE 4 & OVER)
16 A	NAME PLATE	A276 TYPE304
16 B	LEV PLATE	A276 TYPE304
19	GASKET	300SCTDZM
		PTFE
		300SCTDZM-FS
		FLEXIBLE GRAPHITE
20	PACKING WASHER	A276 TYPE316L(UP TO SIZE 1)
30	BALL SEAT	HYPATITE® PTFE
33	CAP NUT	A194 Gr. 2HM
35	CAP BOLT	A193 Gr. B7M
36	GLAND BOLT	STAINLESS STEEL
40	KEYLOCK PLATE	A276 TYPE304
43	HANDLELOCK PLATE	A276 TYPE304
48	SNAP RING	A276 TYPE304
49	STOPPER	A276 TYPE304
51	STOPPER PLATE	A276 TYPE304
57	GLAND BUSHING	G/F PTFE
58	GLAND WASHER	A276 TYPE304
67	STEM BEARING	G/F PTFE
123 A	HANDLELOCK PLATE BOLT	STAINLESS STEEL
123 B	HANDLE BOLT	STAINLESS STEEL
124	SPRING & PIN	A313 & A276 TYPE316
126	STOPPER PLATE BOLT	STAINLESS STEEL
145	CONED DISC SPRINGS	Inconel® 718 or Equivalent
216 A	CE PLATE	A276 TYPE304(SIZE 1½ & OVER)
216 B	ATEX PLATE	A276 TYPE304

DIMENSIONS

Unit : inch

Nominal Size						End Flange								Mounting Dimensions for Actuator								
							Bolt Hole															
in.	mm	d	H	D1	L	D	C	No.	h	Bolt Size	g	t	f	A	B	E	F	G	K	T	U	ISO 5211 Flange Type
1/2	15	0.55	4.25	5.12	5.50	3.75	2.62	4	0.62	1/2	1.38	0.56	0.06	0.36	0.47	0.99	1.42	0.35	0.87	0.04	M5	F03
3/4	20	0.75	4.37	5.12	6.00	4.62	3.25	4	0.75	5/8	1.69	0.62	0.06	0.36	0.47	0.99	1.42	0.35	0.87	0.04	M5	F03
1	25	0.95	4.88	7.09	6.50	4.88	3.50	4	0.75	5/8	2.00	0.69	0.06	0.55	0.71	1.38	1.97	0.55	1.18	0.06	M6	F05
1 1/2	40	1.50	5.28	9.06	7.50	6.14	4.50	4	0.88	3/4	2.88	0.81	0.06	0.67	0.87	2.17	2.76	0.67	1.34	0.06	M8	F07
2	50	1.97	5.63	9.06	8.50	6.50	5.00	8	0.75	5/8	3.62	0.88	0.06	0.67	0.87	2.17	2.76	0.67	1.34	0.06	M8	F07
2 1/2	65	2.52	7.05	15.75	9.50	7.50	5.88	8	0.88	3/4	4.12	1.00	0.06	0.87	1.10	2.76	4.02	0.87	1.77	0.08	M10	F10
3	80	3.00	7.44	15.75	11.12	8.25	6.62	8	0.88	3/4	5.00	1.12	0.06	0.87	1.10	2.76	4.02	0.87	1.77	0.08	M10	F10
4	100	3.94	8.82	29.53	12.00	10.00	7.88	8	0.88	3/4	6.19	1.25	0.06	1.06	1.42	3.35	4.92	1.06	2.05	0.08	M12	F12
6	150	5.95	12.40	39.37	15.88	12.50	10.62	12	0.88	3/4	8.50	1.44	0.06	1.42	1.89	3.94	5.51	1.42	2.48	0.08	M16	F14
8	200	7.95	15.98	59.06	19.75	15.00	13.00	12	1.00	7/8	10.62	1.62	0.06	1.81	2.36	5.12	6.50	1.81	3.11	0.08	M20	F16

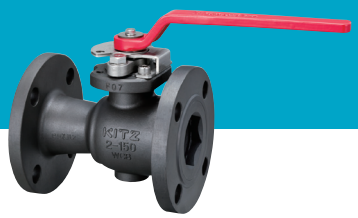

300SCTAZM
300SCTAZM-FS

KITZ

MATERIAL LIST

No.	Name of Parts	Materials
1	BODY	A216 Gr. WCB
3	STEM	A276 TYPE316
4	BALL	A276 TYPE316 or A351 Gr. CF8M
7	GLAND	A351 Gr. CF8
8	GLAND PACKIING	300SCTAZM
		PTFE
		300SCTAZM-FS
		FLEXIBLE GRAPHITE
9	HANDLE	DUCTILE IRON
16A	NAME PLATE	STAINLESS STEEL
16B	LEV PLATE	STAINLESS STEEL
19A	GASKET	PTFE
19B	GASKET	300SCTAZM-FS
		FLEXIBLE GRAPHITE
20	PACKING WASHER	A276 TYPE316L
29	INSERT	A216 Gr. WCB OR A105N
30	BALL SEAT	HYPATITE® PTFE
36	GLAND BOLT	STAINLESS STEEL
40	KEYLOCK PLATE	STAINLESS STEEL
43	HANDLELOCK PLATE	STAINLESS STEEL
48	SNAP RING	STAINLESS STEEL
49	STOPPER	STAINLESS STEEL
51	STOPPER PLATE	STAINLESS STEEL
57	GLAND BUSHING	G/F PTFE
58	GLAND WASHER	A276 TYPE304
67	STEM BEARING	G/F PTFE
123	HANDLELOCK PLATE BOLT	STAINLESS STEEL
124	SPRING & PIN	A313 & A276 TYPE316
126	STOPPER PLATE BOLT	STAINLESS STEEL
145	CONED DISC SPRINGS	INCONEL® 718 or EQUIVALENT
216	ATEX PLATE	STAINLESS STEEL

NOTE

(1) Dimensions A and B are in accordance with CAPI F03-S

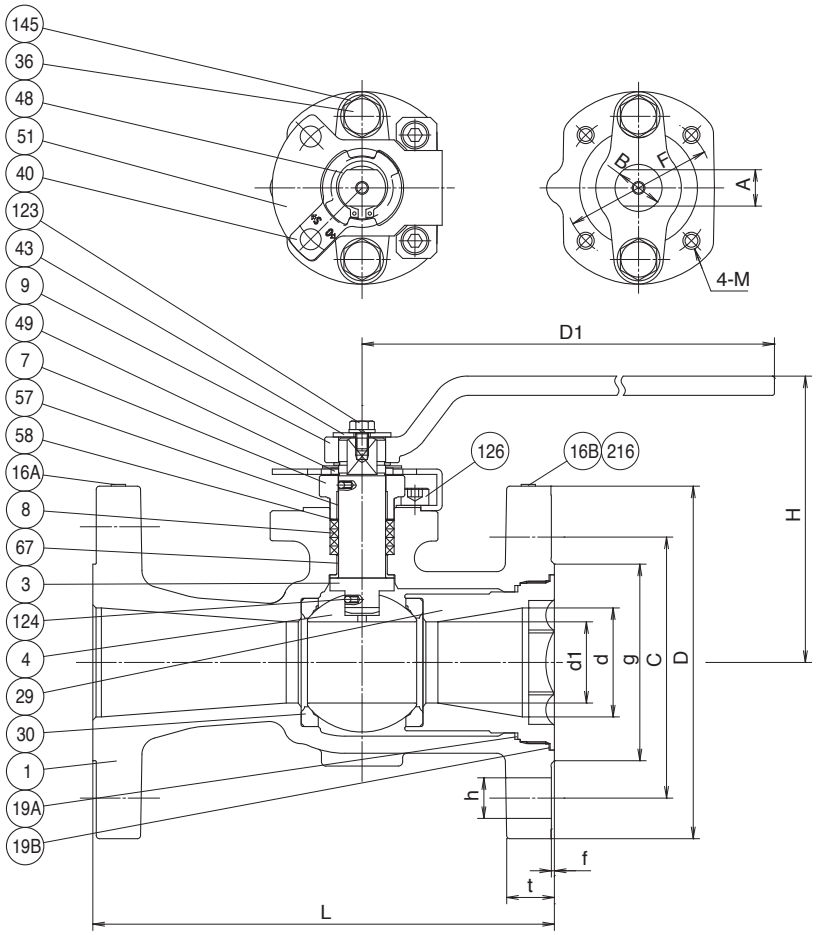

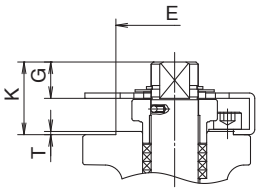

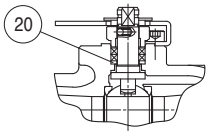

SIZE 1/2,3/4

DIMENSIONS

Unit : inch

Nominal Size							End Flange								Mounting Dimensions for Actuator								
								Bolt Hole															
in.	mm	d	d1	H	D1	L	D	C	No.	h	Bolt Size	g	t	f	A	B	E	F	G	K	T	M	ISO 5211 Flange Type
1/2	15	0.49	0.39	3.62	5.12	5.50	3.75	2.62	4	0.62	1/2	1.38	0.56	0.06	0.276	0.394	0.985	1.417	0.33	0.71	0.04	M5	F03(1)
3/4	20	0.75	0.49	3.74	5.12	6.00	4.62	3.25	4	0.75	5/8	1.69	0.62	0.06	0.276	0.394	0.985	1.417	0.33	0.71	0.04	M5	F03(1)
1	25	0.98	0.69	4.33	5.12	6.50	4.88	3.50	4	0.75	5/8	2.00	0.69	0.06	0.355	0.473	0.985	1.417	0.35	0.87	0.04	M5	F03

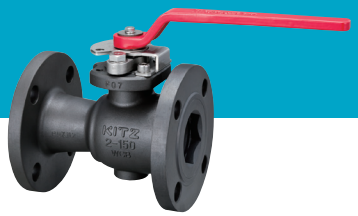

300SCTAZM
300SCTAZM-FS

KITZ

MATERIAL LIST

No.	Name of Parts	Materials
1	BODY	A216 Gr. WCB
3	STEM	A276 TYPE316
4	BALL	A276 TYPE316 or A351 Gr. CF8M
7	GLAND	A351 Gr. CF8
8	GLAND PACKIING	300SCTAZM
		PTFE
		300SCTAZM-FS
		FLEXIBLE GRAPHITE
9	HANDLE	DUCTILE IRON(UP TO SIZE 4)
9A	HANDLE BAR	CARBON STEEL(SIZE 6 & OVER)
9B	HANDLE HEAD	DUCTILE IRON(SIZE 6 & OVER)
16A	NAME PLATE	STAINLESS STEEL
16B	LEV PLATE	STAINLESS STEEL
19A	GASKET	PTFE
19B	GASKET	300SCTAZM-FS
		FLEXIBLE GRAPHITE
20	PACKING WASHER	A276 TYPE316L(SIZE 1 1/2 ONLY)
29	INSERT	A216 Gr. WCB or A105N
30	BALL SEAT	HYPATITE® PTFE
36	GLAND BOLT	STAINLESS STEEL
40	KEYLOCK PLATE	STAINLESS STEEL
43	HANDLELOCK PLATE	STAINLESS STEEL
48	SNAP RING	STAINLESS STEEL
49	STOPPER	STAINLESS STEEL
51	STOPPER PLATE	STAINLESS STEEL
57	GLAND BUSHING	G/F PTFE
58	GLAND WASHER	A276 TYPE304
67	STEM BEARING	G/F PTFE
123A	HANDLELOCK PLATE BOLT	STAINLESS STEEL
123B	HANDLE BOLT	STAINLESS STEEL
124	SPRING & PIN	A313 & A276 TYPE316
126	STOPPER PLATE BOLT	STAINLESS STEEL
145	CONED DISC SPRINGS	INCONEL® 718 or EQUIVALENT
216A	CE PLATE	STAINLESS STEEL
216B	ATEX PLATE	STAINLESS STEEL

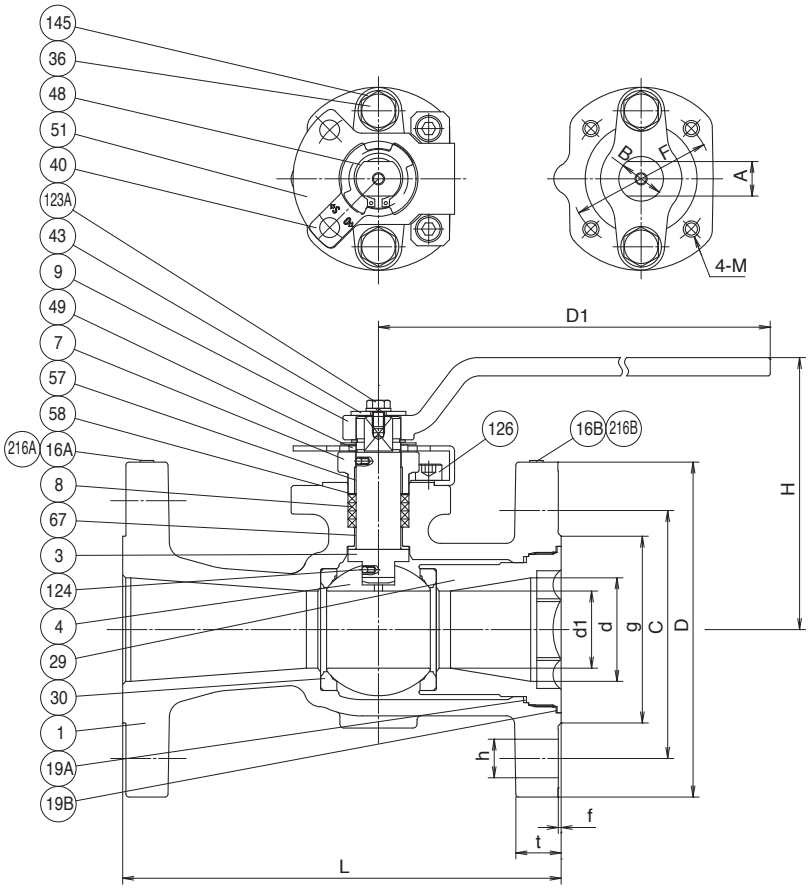

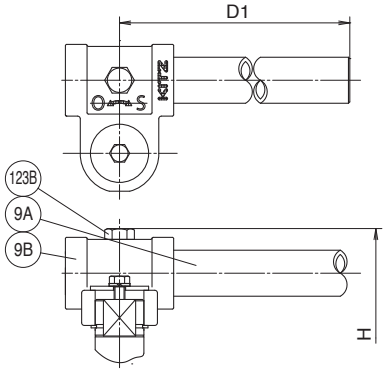

SIZE 6 & OVER

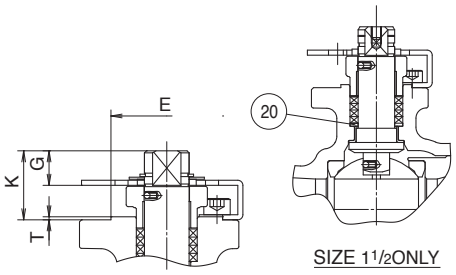

SIZE 1 1/2ONLY

DIMENSIONS

Unit : inch

Nominal Size							End Flange								Mounting Dimensions for Actuator								
								Bolt Hole															
in.	mm	d	d1	H	D1	L	D	C	No.	h	Bolt Size	g	t	f	A	B	E	F	G	K	T	M	ISO 5211 Flange Type
1 1/2	40	1.50	1.18	5.00	6.30	7.5	6.12	4.50	4	0.88	3/4	2.88	0.81	0.06	0.552	0.709	1.378	1.969	0.55	1.18	0.06	M6	F05
2	50	2.00	1.50	5.28	9.06	8.5	6.50	5.00	8	0.75	5/8	3.62	0.88	0.06	0.670	0.867	2.166	2.756	0.67	1.34	0.06	M8	F07
3	80	3.00	2.98	6.81	15.75	11.12	8.25	6.62	8	0.88	3/4	5.00	1.12	0.06	0.867	1.103	2.756	4.016	0.87	1.77	0.08	M10	F10
4	100	4.00	3.00	7.44	15.75	12.0	10.00	7.88	8	0.88	3/4	6.19	1.25	0.06	0.867	1.103	2.756	4.016	0.87	1.77	0.08	M10	F10
6	150	6.00	3.94	9.88	29.53	15.88	12.50	10.62	12	0.88	3/4	8.50	1.44	0.06	1.063	1.418	3.347	4.921	1.06	2.05	0.08	M12	F12
8	200	8.00	5.94	12.40	39.37	16.5	15.00	13.00	12	1.00	7/8	10.62	1.62	0.06	1.418	1.890	3.937	5.512	1.42	2.48	0.08	M16	F14
10	250	10.00	7.36	15.43	59.06	18.0	17.50	15.25	16	1.12	1	12.75	1.88	0.06	1.811	2.362	5.118	6.496	1.81	3.11	0.08	M20	F16

G-300SCTAZM
G-300SCTAZM-FS

KITZ

MATERIAL LIST

No.	Name of Parts	Materials
1	BODY	A216 Gr. WCB
3	STEM	A276 TYPE316
4	BALL	A351 Gr. CF8M
7	GLAND	A351 Gr. CF8
8	GLAND PACKIING	G-300SCTAZM
		PTFE
		G-300SCTAZM-FS
		FLEXIBLE GRAPHITE
16A	NAME PLATE	STAINLESS STEEL
16B	LEV PLATE	STAINLESS STEEL
19A	GASKET	PTFE
19B	GASKET	G-300SCTAZM-FS
		FLEXIBLE GRAPHITE
29	INSERT	A216 Gr. WCB or A105N
30	BALL SEAT	HYPATITE® PTFE
36	GLAND BOLT	STAINLESS STEEL
57	GLAND BUSHING	G/F PTFE
58	GLAND WASHER	A276 TYPE304
67	STEM BEARING	G/F PTFE
92	CONNECTOR	CARBON STEEL
93	BRAKET	CARBON STEEL
99	BOLT	CARBON STEEL
102	GEAR UNIT	
124	SPRING & PIN	A313 & A276 TYPE316
145	CONED DISC SPRINGS	INCONEL® 718 or EQUIVALENT
216A	CE PLATE	STAINLESS STEEL
216B	ATEX PLATE	STAINLESS STEEL

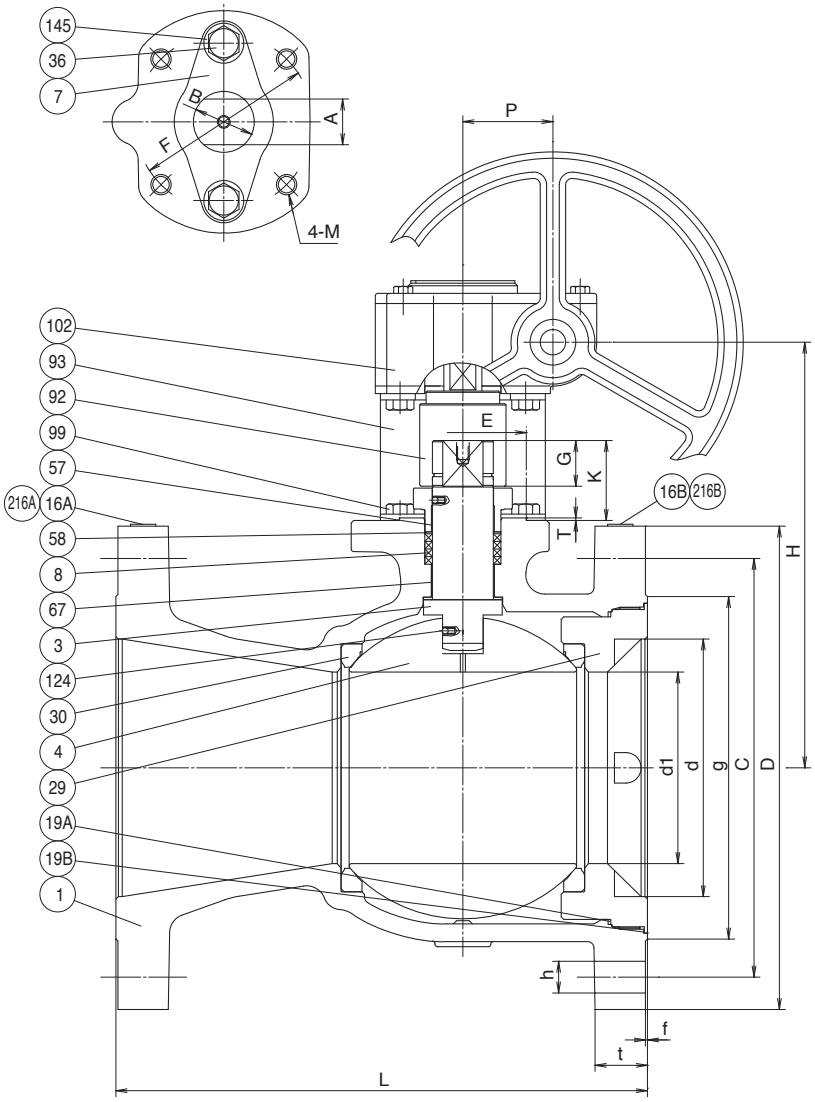

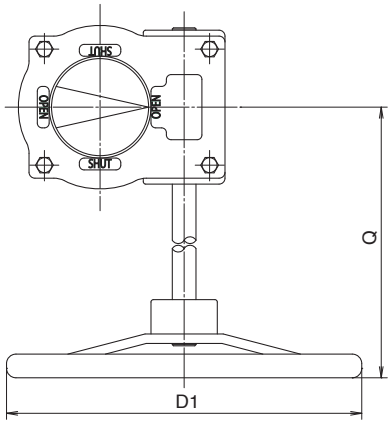

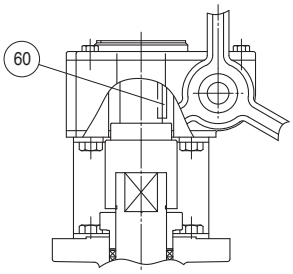

SIZE 10 ONLY

DIMENSIONS

Unit : inch

Nominal Size							End Flange								Mounting Dimensions for Actuator										
								Bolt Hole																	
in.	mm	d	d1	H	D1	L	D	C	No.	h	Bolt Size	g	t	f	P	Q	A	B	E	F	G	K	T	M	ISO 5211 Flange Type
10	250	10.00	7.36	15.75	15.75	18.00	17.5	15.25	16	1.12	1	12.75	1.88	0.06	3.39	13.27	1.811	2.362	5.118	6.496	1.81	3.11	0.08	M20	F16

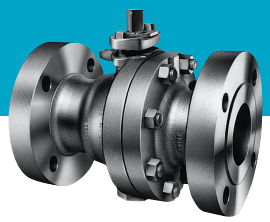

600SCTBM
600SCTBM-FS

KITZ

MATERIAL LIST

No.	Name of Parts	Materials
1	BODY	A105
2	BODY CAP	A105
3	STEM	A276 TYPE 316
4	BALL	A276 TYPE 316
7	GLAND	A351 Gr. CF8
8	GLAND PACKING	600SCTBM
		PTFE
		600SCTBM-FS
		FLEXIBLE GRAPHITE
19	GASKET	600SCTBM-FS
		FLEXIBLE GRAPHITE SPIRAL WOUND
9	HANDLE	DUCTILE IRON
20	PACKING WASHER	A276 TYPE 316
30	BALL SEAT	G/F MoS_2 PTFE
33	CAP NUT	A194 Gr. 2HM
35	CAP BOLT	A193 Gr. B7M
36	GLAND BOLT	ALLOY STEEL
45 A	O RING	NBR
45 B	O RING	NBR
47	THRUST WASHER	METAL BACKED PTFE
49	STOPPER	STAINLESS STEEL
67	STEM BEARING	G/F PTFE
123	HANDLE BOLT	CARBON STEEL
124 A	SPRING & PIN	A313 & A276 TYPE 316
124 B	RING SPRING	A276 TYPE 316
143	SEAT SPRING	A167 TYPE 304
150	SEAT RETAINER	A105 (1)
155	SPACER	600SCTBM-FS
		PTFE
175	RETAINER GLAND	600SCTBM-FS
		A105 (1)
176	RETAINER PACKING	600SCTBM-FS
		FLEXIBLE GRAPHITE

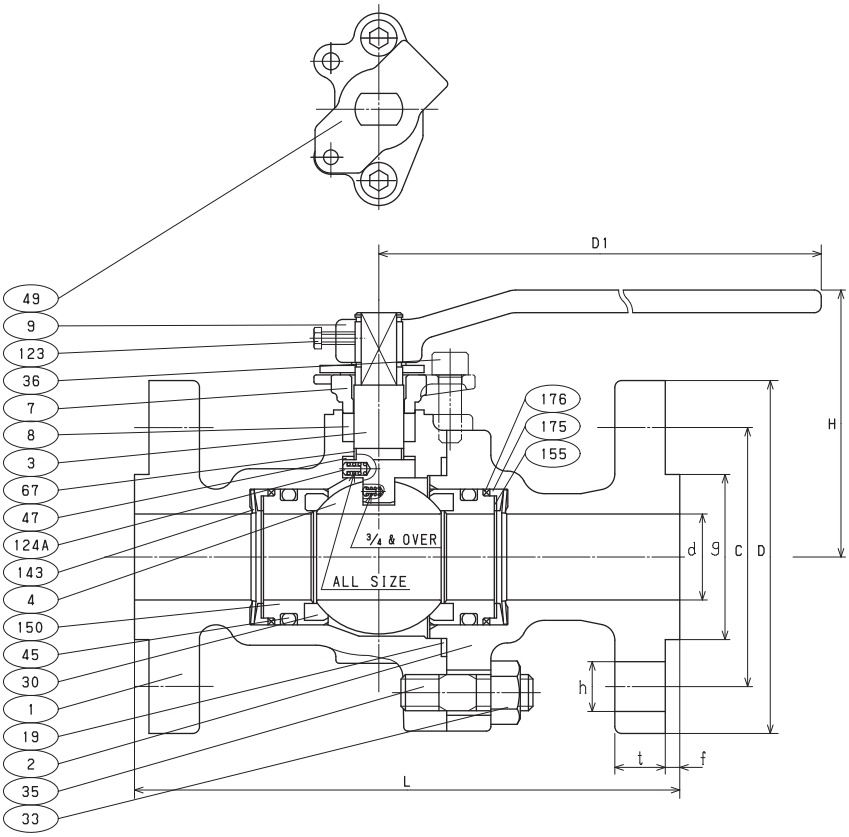

NOTE

(1) Zinc plating.

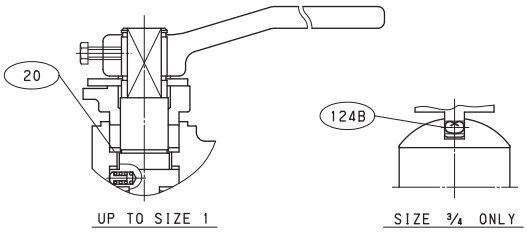

DIMENSIONS

Unit : inch

Nominal Size						End Flange							
							Bolt Hole						
in.	mm	d	H	D1	L	D	C	No.	h	Bolt Size	g	t	f
1/2	15	0.51	4.13	5.12	6.50	3.75	2.62	4	0.62	1/2	1.38	0.56	0.25
3/4	20	0.75	4.25	5.12	7.50	4.62	3.25	4	0.75	5/8	1.69	0.62	0.25
1	25	0.98	5.12	6.30	8.50	4.88	3.50	4	0.75	5/8	2.00	0.69	0.25
1 1/2	40	1.50	4.65	9.06	9.50	6.12	4.50	4	0.88	3/4	2.88	0.88	0.25

1500SCTBM
1500SCTBM-FS

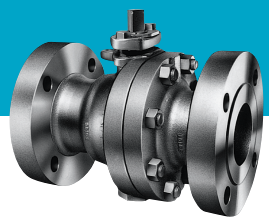

KITZ

MATERIAL LIST

No.	Name of Parts	Materials
1	BODY	A216 Gr. WCB
2	BODY CAP	A216 Gr. WCB
3	STEM	A276 TYPE 316
4	BALL	A276 TYPE 316
7	GLAND	A351 Gr. CF8
8	GLAND PACKING	1500SCTBM
		PTFE
		1500SCTBM-FS
		FLEXIBLE GRAPHITE
9	HANDLE	DUCTILE IRON
19	GASKET	1500SCTBM-FS
		FLEXIBLE GRAPHITE SPIRAL WOUND
30	BALL SEAT	MoS_2 NYLON
31	STEM WASHER	A276 TYPE 316
33	CAP NUT	A194 Gr. 2HM
35	CAP BOLT	A193 Gr. B7M
36	GLAND BOLT	ALLOY STEEL
45 A	O RING	NBR
45 B	O RING	NBR
47	THRUST WASHER	METAL BACKED PTFE
49	STOPPER	STAINLESS STEEL
67	STEM BEARING	G/F PTFE
85	PLUG	A576 Gr. 1025 (1)
123	HANDLE BOLT	CARBON STEEL
124	SPRING & PIN	A313 & A276 TYPE 316
143	SEAT SPRING	A167 TYPE 304
146	BACK-UP RING	PTFE
150	SEAT RETAINER	A105 (1)
155	SPACER	1500SCTBM-FS
		PTFE
175	RETAINER GLAND	1500SCTBM-FS
		A105 (1)
176	RETAINER PACKING	1500SCTBM-FS
		FLEXIBLE GRAPHITE

NOTE

(1) Zinc plating.

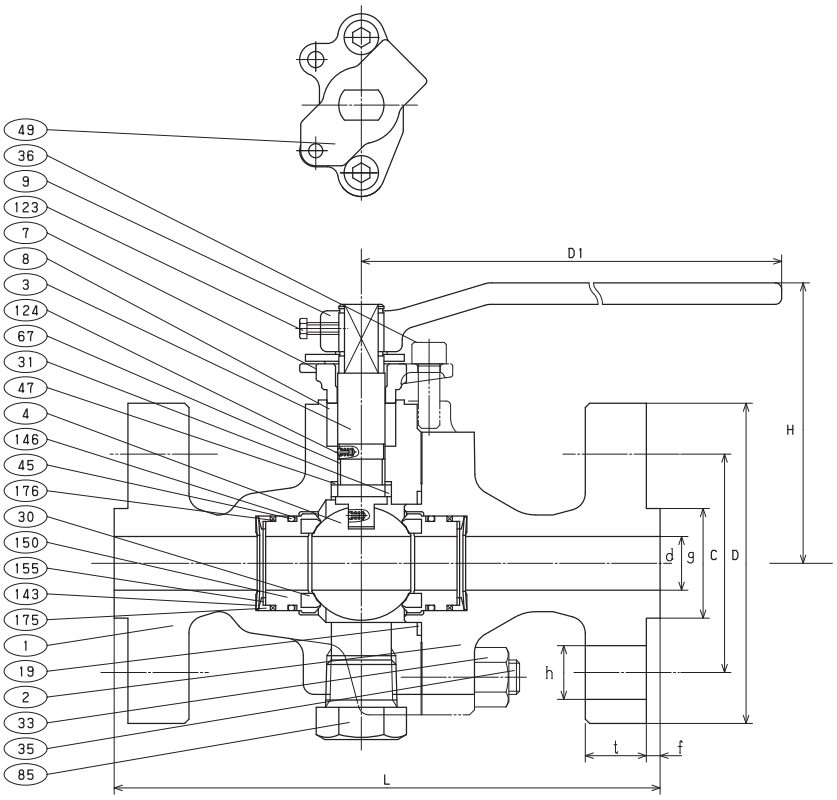

DIMENSIONS

Unit : inch

Nominal Size						End Flange							
							Bolt Hole						
in.	mm	d	H	D1	L	D	C	No.	h	Bolt Size	g	t	f
1/2	15	0.51	5.20	6.30	8.50	4.75	3.25	4	0.88	3/4	1.38	0.88	0.25
3/4	20	0.75	4.61	9.06	9.00	5.12	3.50	4	0.88	3/4	1.69	1.00	0.25
1	25	0.98	4.84	9.06	10.00	5.88	4.00	4	1.00	7/8	2.00	1.12	0.25
1 1/2	40	1.50	6.18	15.70	12.00	7.00	4.88	4	1.12	1	2.88	1.25	0.25

150UTDZM
150UTDZM-FS

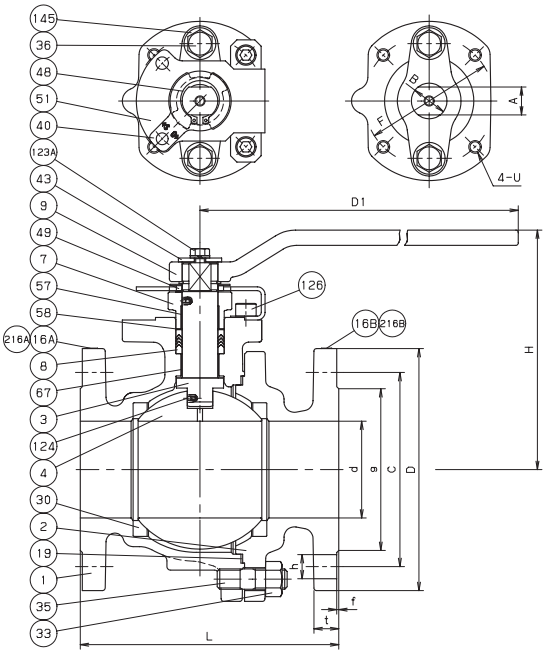

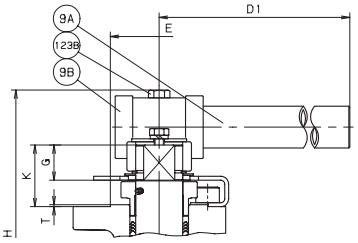

SIZE 6& OVER

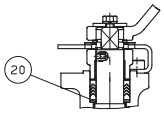

UP TO SIZE 1

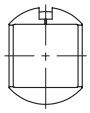

SIZE 5、6

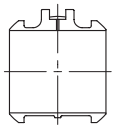

SIZE 8 ONLY
CORED CAVITY

MATERIAL LIST

No.	Name of Parts	Materials
1	BODY	A351 Gr. CF8M
2	BODY CAP	A351 Gr. CF8M
3	STEM	A276 TYPE316
4	BALL	A276 TYPE316 or A351 Gr. CF8M
7	GLAND	A351 Gr. CF8
8	GLAND PACKIING	150UTDZM
		PTFE
		150UTDZM-FS
		FLEXIBLE GRAPHITE
9	HANDLE	DUCTILE IRON(UP TO SIZE 5)
9 A	HANDLE BAR	CARBON STEEL(SIZE 6 & OVER)
9 B	HANDLE HEAD	DUCTILE IRON(SIZE 6 & OVER)
16 A	NAME PLATE	A276 TYPE304
16 B	LEV PLATE	A276 TYPE304
19	GASKET	150UTDZM
		PTFE
		150UTDZM-FS
		FLEXIBLE GRAPHITE
20	PACKING WASHER	A276 TYPE316L(UP TO SIZE 1)
30	BALL SEAT	HYPATITE® PTFE
33	CAP NUT	A194 Gr. 8M
35	CAP BOLT	A193 Gr. B8M
36	GLAND BOLT	STAINLESS STEEL
40	KEYLOCK PLATE	A276 TYPE304
43	HANDLELOCK PLATE	A276 TYPE304
48	SNAP RING	A276 TYPE304
49	STOPPER	A276 TYPE304
51	STOPPER PLATE	A276 TYPE304
57	GLAND BUSHING	G/F PTFE
58	GLAND WASHER	A276 TYPE304
67	STEM BEARING	G/F PTFE
123 A	HANDLELOCK PLATE BOLT	STAINLESS STEEL
123 B	HANDLE BOLT	STAINLESS STEEL
124	SPRING & PIN	A313 & A276 TYPE316
126	STOPPER PLATE BOLT	STAINLESS STEEL
145	CONED DISC SPRINGS	Inconel® 718 or Equivalent
216 A	CE PLATE	A276 TYPE304(SIZE 1 1/2 & OVER)
216 B	ATEX PLATE	A276 TYPE304

DIMENSIONS

Unit : inch

Nominal Size						End Flange								Mounting Dimensions for Actuator								
							Bolt Hole															
in.	mm	d	H	D1	L	D	C	No.	h	Bolt Size	g	t	f	A	B	E	F	G	K	T	U	ISO 5211 Flange Type
1/2	15	0.55	4.53	6.30	4.25	3.50	2.38	4	0.62	1/2	1.38	0.44	0.06	0.36	0.47	0.99	1.42	0.37	0.85	0.06	1/4-20UNC	F03
3/4	20	0.75	4.72	6.30	4.62	3.88	2.75	4	0.62	1/2	1.69	0.44	0.06	0.36	0.47	0.99	1.42	0.37	0.85	0.06	1/4-20UNC	F03
1	25	0.95	5.28	7.09	5.00	4.25	3.12	4	0.62	1/2	2.00	0.44	0.06	0.55	0.71	1.38	1.97	0.51	1.26	0.08	1/4-20UNC	F05
1 1/2	40	1.50	5.63	9.06	6.50	5.00	3.88	4	0.62	1/2	2.88	0.56	0.06	0.67	0.87	2.17	2.76	0.67	1.34	0.08	5/16-18UNC	F07
2	50	1.97	5.98	9.06	7.00	6.00	4.75	4	0.75	5/8	3.62	0.62	0.06	0.67	0.87	2.17	2.76	0.67	1.34	0.08	5/16-18UNC	F07
2 1/2	65	2.52	8.11	15.75	7.50	7.00	5.50	4	0.75	5/8	4.12	0.69	0.06	0.87	1.10	2.76	4.02	0.87	1.77	0.08	3/8-16UNC	F10
3	80	3.00	8.39	15.75	8.00	7.50	6.00	4	0.75	5/8	5.00	0.75	0.06	0.87	1.10	2.76	4.02	0.87	1.77	0.08	3/8-16UNC	F10
4	100	3.94	10.08	18.11	9.00	9.00	7.50	8	0.75	5/8	6.19	0.94	0.06	1.06	1.42	3.35	4.92	1.06	1.97	0.08	1/2-13UNC	F12
6	150	5.95	12.60	39.37	15.50	11.00	9.50	8	0.88	3/4	8.50	1.00	0.06	1.42	1.89	3.94	5.51	1.42	2.48	0.08	5/8-11UNC	F14
8	200	7.95	16.34	59.06	18.00	13.50	11.75	8	0.88	3/4	10.62	1.12	0.06	1.81	2.36	5.12	6.50	1.81	3.07	0.08	3/4-10UNC	F16

G-150UTDZM

KITZ

MATERIAL LIST

No.	Name of Parts	Materials
1	BODY	A351 Gr. CF8M
2	BODY CAP	A351 Gr. CF8M
3	STEM	A276 TYPE316
4	BALL	A351 Gr. CF8M
7	GLAND	A351 Gr. CF8
8	GLAND PACKIING	G-150SCTDZM
		PTFE
		G-150SCTDZM-FS
		FLEXIBLE GRAPHITE
16 A	NAME PLATE	A276 TYPE304
16 B	LEV PLATE	A276 TYPE304
19	GASKET	G-150SCTDZM
		PTFE
		G-150SCTDZM-FS
		FLEXIBLE GRAPHITE
30	BALL SEAT	HYPATITE® PTFE
33	CAP NUT	A194 Gr. 8M
35	CAP BOLT	A193 Gr. B8M
36	GLAND BOLT	STAINLESS STEEL
57	GLAND BUSHING	G/F PTFE
58	GLAND WASHER	A276 TYPE304
67	STEM BEARING	G/F PTFE
92	CONNECTOR	CARBON STEEL
93	BRAKET	DUCTILE IRON
99	BOLT	STAINLESS STTEL
102	GEAR UNIT	
124	SPRING & PIN	A313 & A276 TYPE316
145	CONED DISC SPRINGS	Inconel® 718 or Equivalent
216 A	CE PLATE	A276 TYPE304
216 B	ATEX PLATE	A276 TYPE304

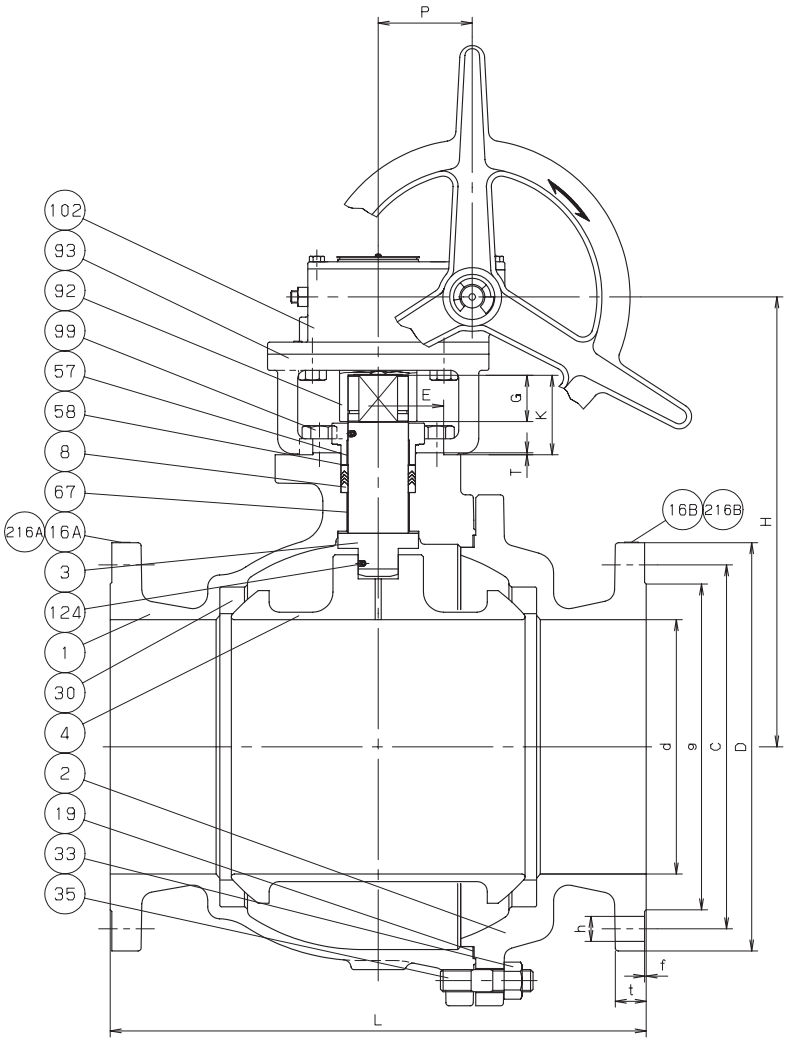

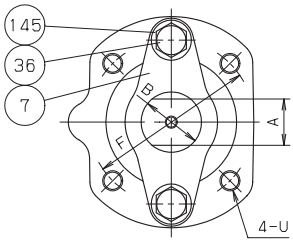

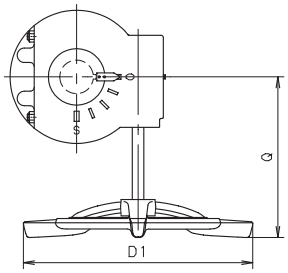

DIMENSIONS

Unit : inch

Nominal Size						End Flange										Mounting Dimensions for Actuator								
							Bolt Hole																	
in.	mm	d	H	D1	L	D	C	No.	h	Bolt Size	g	t	f	P	Q	A	B	E	F	G	K	T	U	ISO 5211 Flange Type
10	250	9.96	17.64	19.69	21.00	16.00	14.25	12	1.00	7/8	12.75	1.19	0.06	3.68	14.29	1.81	2.36	5.12	6.50	1.81	3.07	0.08	M20	F16

150UTAZM
150UTAZM-FS

MATERIAL LIST

No.	Name of Parts	Materials
1	BODY	A351 Gr. CF8M
3	STEM	A276 TYPE316
4	BALL	A276 TYPE316 or A351 Gr. CF8M
7	GLAND	A351 Gr. CF8
8	GLAND PACKIING	150UTAZM
		PTFE
		150UTAZM-FS
		FLEXIBLE GRAPHITE
9	HANDLE	DUCTILE IRON(UP TO SIZE 5)
16A	NAME PLATE	STAINLESS STEEL
16B	LEV PLATE	STAINLESS STEEL
19A	GASKET	PTFE
19B	GASKET	150UTAZM-FS
		FLEXIBLE GRAPHITE
20	PACKING WASHER	A276 TYPE316L
29	INSERT	A351 Gr. CF8M or A182 Gr. F316 or A276 TYPE316
30	BALL SEAT	HYPATITE® PTFE
36	GLAND BOLT	STAINLESS STEEL
40	KEYLOCK PLATE	STAINLESS STEEL
43	HANDLELOCK PLATE	STAINLESS STEEL
48	SNAP RING	STAINLESS STEEL
49	STOPPER	STAINLESS STEEL
51	STOPPER PLATE	STAINLESS STEEL
57	GLAND BUSHING	G/F PTFE
58	GLAND WASHER	A276 TYPE304
67	STEM BEARING	G/F PTFE
123	HANDLELOCK PLATE BOLT	STAINLESS STEEL
124	SPRING & PIN	A313 & A276 TYPE316
126	STOPPER PLATE BOLT	STAINLESS STEEL
145	CONED DISC SPRINGS	INCONEL® 718 or EQUIVALENT
216	ATEX PLATE	STAINLESS STEEL

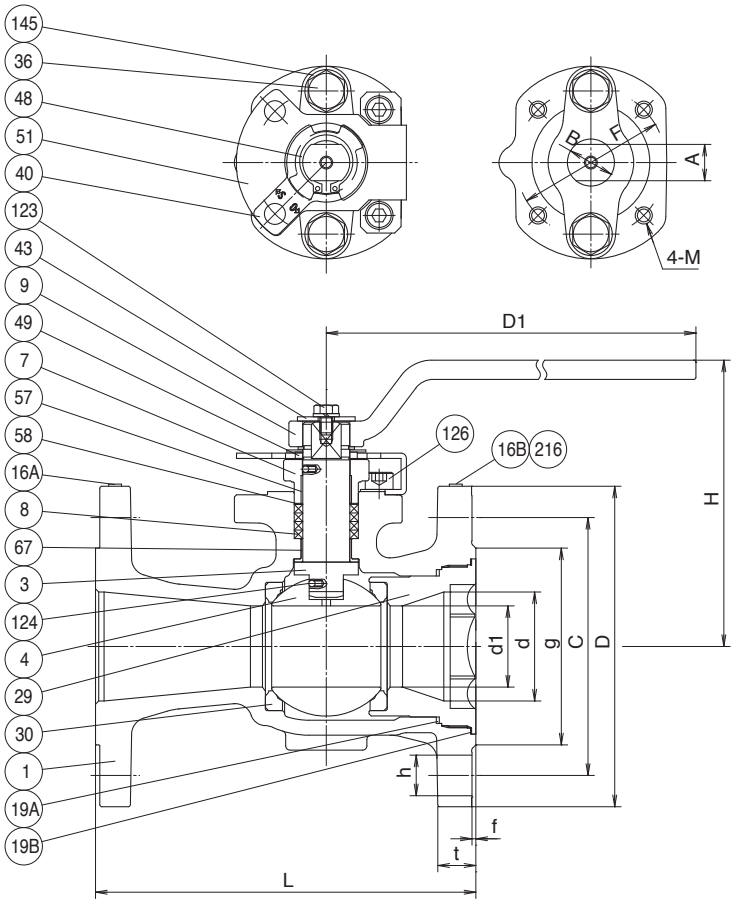

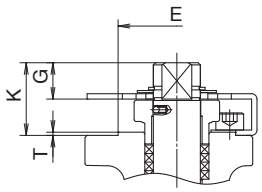

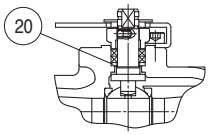

SIZE 1/2,3/4

NOTE

(1) Dimensions A and B are in accordance with CAPI F03-S

DIMENSIONS

Unit : inch

Nominal Size							End Flange								Mounting Dimensions for Actuator								
								Bolt Hole															
in.	mm	d	d1	H	D1	L	D	C	No.	h	Bolt Size	g	t	f	A	B	E	F	G	K	T	M	ISO 5211 Flange Type
1/2	15	0.49	0.39	3.62	5.12	4.25	3.50	2.38	4	0.62	1/2	1.38	0.44	0.06	0.276	0.394	0.985	1.417	0.33	0.71	0.04	M5	F03(1)
3/4	20	0.75	0.49	3.74	5.12	4.62	3.88	2.75	4	0.62	1/2	1.69	0.44	0.06	0.276	0.394	0.985	1.417	0.33	0.71	0.04	M5	F03(1)
1	25	0.98	0.69	4.33	5.12	5.00	4.25	3.12	4	0.62	1/2	2.00	0.44	0.06	0.355	0.473	0.985	1.417	0.35	0.87	0.04	M5	F03

150UTAZM
150UTAZM-FS

KITZ

MATERIAL LIST

No.	Name of Parts	Materials
1	BODY	A216 Gr. WCB
3	STEM	A276 TYPE316
4	BALL	A276 TYPE316 or A351 Gr. CF8M
7	GLAND	A351 Gr. CF8
8	GLAND PACKIING	150UTAZM
		PTFE
		150UTAZM-FS
		FLEXIBLE GRAPHITE
9	HANDLE	DUCTILE IRON(UP TO SIZE 6)
9A	HANDLE BAR	CARBON STEEL(SIZE 8& OVER)
9B	HANDLE HEAD	DUCTILE IRON(SIZE 8 & OVER)
16A	NAME PLATE	STAINLESS STEEL
16B	LEV PLATE	STAINLESS STEEL
19A	GASKET	PTFE
19B	GASKET	150UTAZM-FS
		FLEXIBLE GRAPHITE
20	PACKING WASHER	A276 TYPE316L(SIZE 1 1/2 ONLY)
29	INSERT	A351 Gr. CF8M or A182 Gr. F316 or A276 TYPE316
30	BALL SEAT	HYPATITE® PTFE
36	GLAND BOLT	STAINLESS STEEL
40	KEYLOCK PLATE	STAINLESS STEEL
43	HANDLELOCK PLATE	STAINLESS STEEL
48	SNAP RING	STAINLESS STEEL
49	STOPPER	STAINLESS STEEL
51	STOPPER PLATE	STAINLESS STEEL
57	GLAND BUSHING	G/F PTFE
58	GLAND WASHER	A276 TYPE304
67	STEM BEARING	G/F PTFE
123A	HANDLELOCK PLATE BOLT	STAINLESS STEEL
123B	HANDLE BOLT	STAINLESS STEEL
124	SPRING & PIN	A313 & A276 TYPE316
126	STOPPER PLATE BOLT	STAINLESS STEEL
145	CONED DISC SPRING	INCONEL® 718 or EQUIVALENT
216A	CE PLATE	STAINLESS STEEL
216B	ATEX PLATE	STAINLESS STEEL

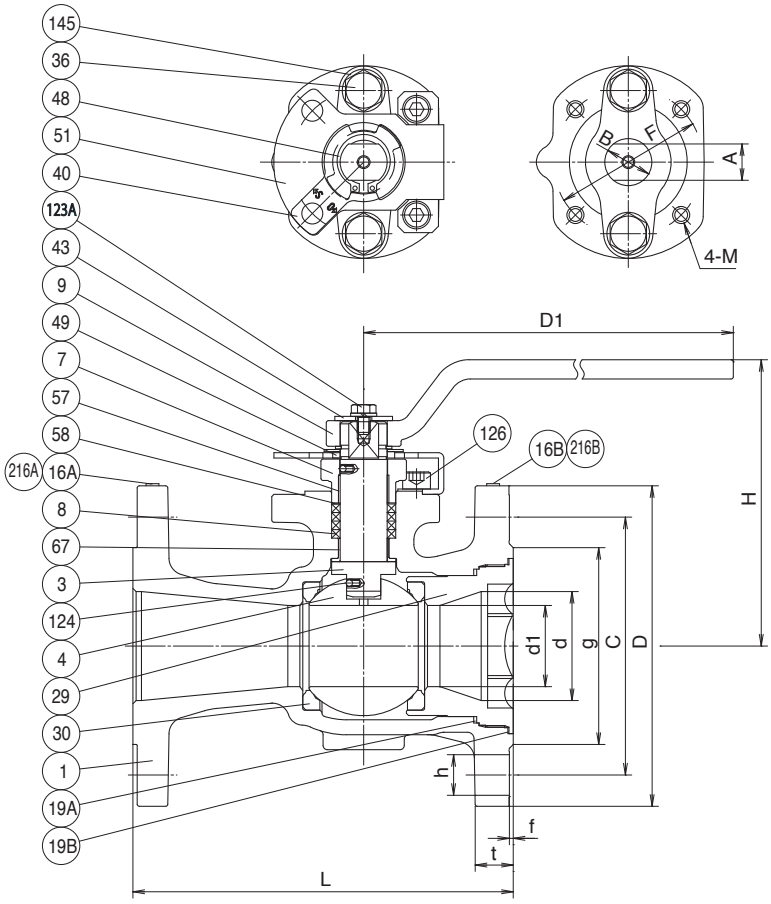

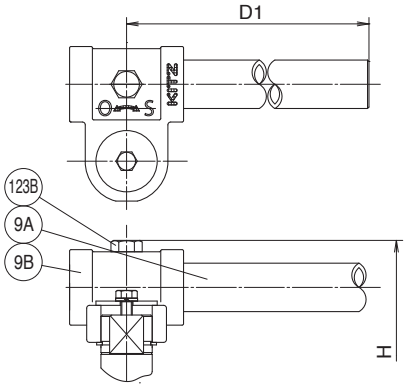

SIZE 8 & OVER

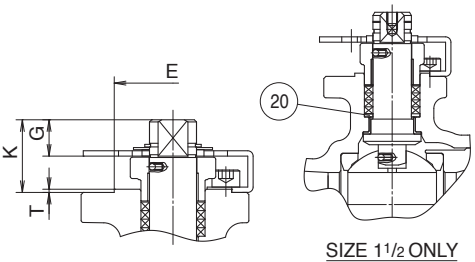

SIZE 1 1/2 ONLY

DIMENSIONS

Unit : inch

Nominal Size							End Flange								Mounting Dimensions for Actuator								
								Bolt Hole															
in.	mm	d	d1	H	D1	L	D	C	No.	h	Bolt Size	g	t	f	A	B	E	F	G	K	T	M	ISO 5211 Flange Type
1 1/2	40	1.50	1.18	5.00	6.30	6.5	5.00	3.88	4	0.62	1/2	2.88	0.56	0.06	0.552	0.709	1.378	1.969	0.55	1.18	0.06	M6	F05
2	50	2.00	1.50	5.28	9.06	7.0	6.00	4.75	4	0.75	5/8	3.62	0.62	0.06	0.670	0.867	2.166	2.756	0.67	1.34	0.06	M8	F07
3	80	3.00	2.99	6.81	15.75	8.0	7.50	6.00	4	0.75	5/8	5.00	0.75	0.06	0.867	1.103	2.756	4.016	0.87	1.77	0.08	M10	F10
4	100	4.00	3.00	7.44	15.75	9.0	9.00	7.50	8	0.75	5/8	6.19	0.94	0.06	0.867	1.103	2.756	4.016	0.87	1.77	0.08	M10	F10
6	150	6.00	3.94	8.82	18.11	10.5	11.00	9.50	8	0.88	3/4	8.50	1.00	0.06	1.063	1.418	3.347	4.921	1.06	2.05	0.08	M12	F12
8	200	8.00	5.94	12.40	39.37	11.5	13.50	11.75	8	0.88	3/4	10.62	1.12	0.06	1.418	1.890	3.937	5.512	1.42	2.48	0.08	M16	F14
10	250	10.00	7.36	15.43	59.06	13.0	16.00	14.25	12	1.00	7/8	12.75	1.16	0.06	1.811	2.367	5.118	6.496	1.81	3.11	0.08	M20	F16

G-150UTAZM
G-150UTAZM-FS

KITZ

MATERIAL LIST

No.	Name of Parts	Materials
1	BODY	A351 Gr. CF8M
3	STEM	A276 TYPE316
4	BALL	A351 Gr. CF8M
7	GLAND	A351 Gr. CF8
8	GLAND PACKIING	G-150UTAZM
		PTFE
		G-150UTAZM-FS
		FLEXIBLE GRAPHITE
16A	NAME PLATE	STAINLESS STEEL
16B	LEV PLATE	STAINLESS STEEL
19A	GASKET	PTFE
19B	GASKET	G-150UTAZM-FS
		FLEXIBLE GRAPHITE
29	INSERT	A351 Gr. CF8M
30	BALL SEAT	HYPATITE® PTFE
36	GLAND BOLT	STAINLESS STEEL
57	GLAND BUSHING	G/F PTFE
58	GLAND WASHER	A276 TYPE304
60	KEY	CARBON STEEL
67	STEM BEARING	G/F PTFE
92	CONNECTOR	CARBON STEEL
93	BRAKET	CARBON STEEL
99	BOLT	CARBON STEEL
102	GEAR UNIT	
124	SPRING & PIN	A313 & A276 TYPE316
145	CONED DISC SPRING	INCONEL® 718 or EQUIVALENT
216A	CE PLATE	STAINLESS STEEL
216B	ATEX PLATE	STAINLESS STEEL

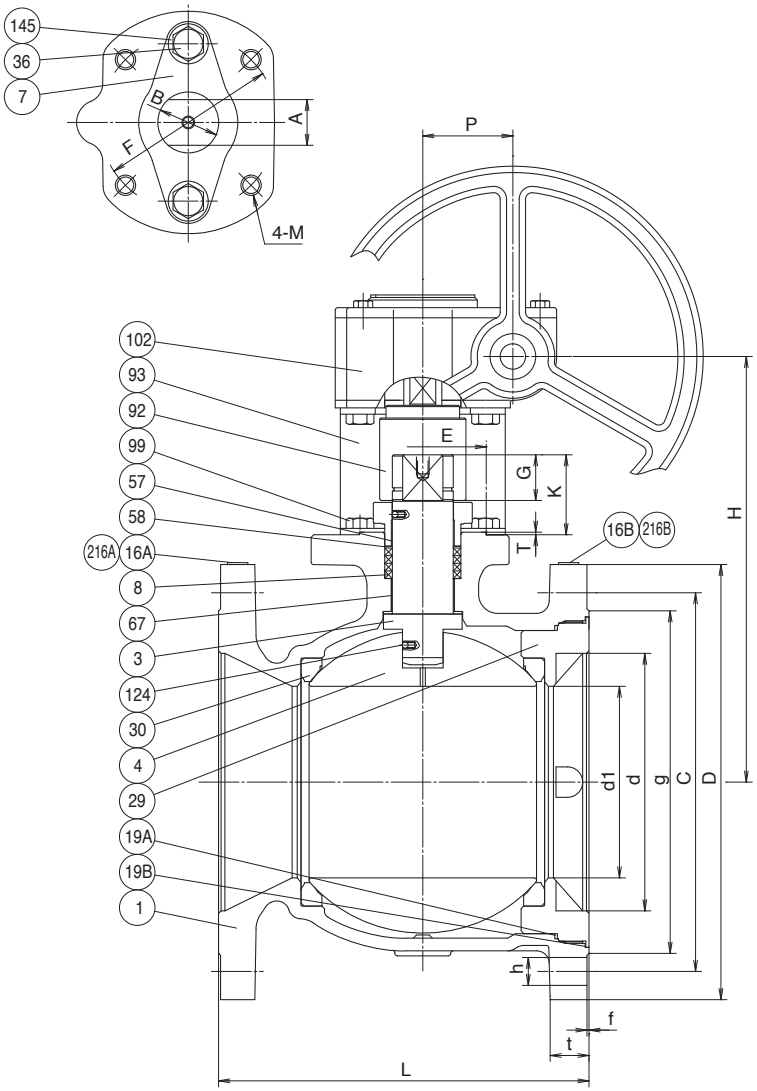

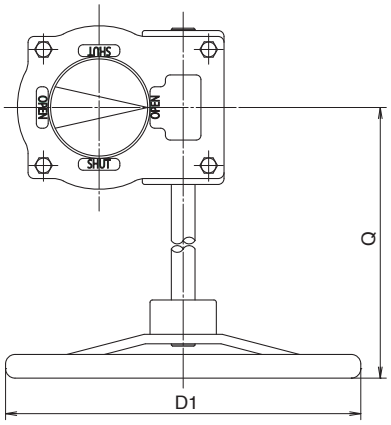

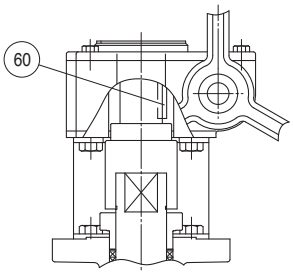

SIZE 10 ONLY

DIMENSIONS

Unit : inch

Nominal Size							End Flange								Mounting Dimensions for Actuator										
								Bolt Hole																	
in.	mm	d	d1	H	D1	L	D	C	No.	h	Bolt Size	g	t	f	P	Q	A	B	E	F	G	K	T	M	ISO 5211 Flange Type
10	250	10.00	7.36	15.75	15.75	13.0	16.00	14.25	12	1.00	7/8	12.75	1.19	0.06	3.39	13.27	1.811	2.362	5.118	6.496	1.81	3.11	0.08	M20	F16

300UTDZM
300UTDZM-FS

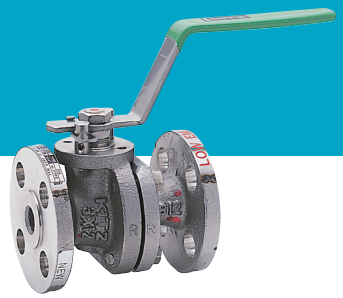

KITZ

MATERIAL LIST

No.	Name of Parts	Materials
1	BODY	A351 Gr. CF8M
2	BODY CAP	A351 Gr. CF8M
3	STEM	A276 TYPE316
4	BALL	A276 TYPE316 or A351 Gr. CF8M
7	GLAND	A351 Gr. CF8
8	GLAND PACKIING	300UTDZM
		PTFE
		300UTDZM-FS
		FLEXIBLE GRAPHITE
9	HANDLE	DUCTILE IRON(UP TO SIZE 3)
9 A	HANDLE BAR	CARBON STEEL(SIZE 4 & OVER)
9 B	HANDLE HEAD	DUCTILE IRON(SIZE 4 & OVER)
16 A	NAME PLATE	A276 TYPE304
16 B	LEV PLATE	A276 TYPE304
19	GASKET	300UTDZM
		PTFE
		300UTDZM-FS
		FLEXIBLE GRAPHITE
20	PACKING WASHER	A276 TYPE316L(UP TO SIZE 1)
30	BALL SEAT	HYPATITE® PTFE
33	CAP NUT	A194 Gr. 8M
35	CAP BOLT	A193 Gr. B8M
36	GLAND BOLT	STAINLESS STEEL
40	KEYLOCK PLATE	A276 TYPE304
43	HANDLELOCK PLATE	A276 TYPE304
48	SNAP RING	A276 TYPE304
49	STOPPER	A276 TYPE304
51	STOPPER PLATE	A276 TYPE304
57	GLAND BUSHING	G/F PTFE
58	GLAND WASHER	A276 TYPE304
67	STEM BEARING	G/F PTFE
123 A	HANDLELOCK PLATE BOLT	STAINLESS STEEL
123 B	HANDLE BOLT	STAINLESS STEEL
124	SPRING & PIN	A313 & A276 TYPE316
126	STOPPER PLATE BOLT	STAINLESS STEEL
145	CONED DISC SPRINGS	Inconel® 718 or Equivalent
216 A	CE PLATE	A276 TYPE304(SIZE 1 1/2 & OVER)
216 B	ATEX PLATE	A276 TYPE304

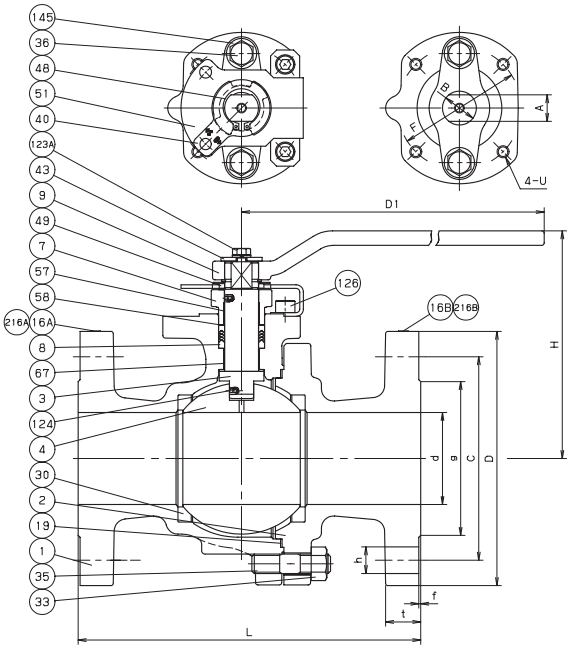

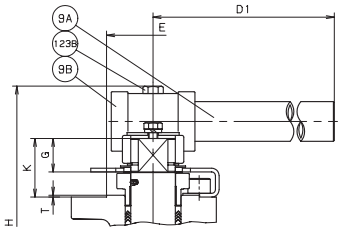

SIZE 4& OVER

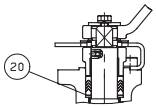

UP TO SIZE 1

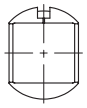

SIZE 6 ONLY

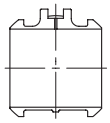

SIZE 8 ONLY
CORED CAVITY

DIMENSIONS

Unit : inch

Nominal Size						End Flange								Mounting Dimensions for Actuator								
							Bolt Hole															
in.	mm	d	H	D1	L	D	C	No.	h	Bolt Size	g	t	f	A	B	E	F	G	K	T	U	ISO 5211 Flange Type
1/2	15	0.55	4.25	5.12	5.50	3.75	2.62	4	0.62	1/2	1.38	0.56	0.06	0.36	0.47	0.99	1.42	0.35	0.87	0.04	M5	F03
3/4	20	0.75	4.37	5.12	6.00	4.62	3.25	4	0.75	5/8	1.69	0.62	0.06	0.36	0.47	0.99	1.42	0.35	0.87	0.04	M5	F03
1	25	0.95	4.88	7.09	6.50	4.88	3.50	4	0.75	5/8	2.00	0.69	0.06	0.55	0.71	1.38	1.97	0.55	1.18	0.06	M6	F05
1 1/2	40	1.50	5.28	9.06	7.50	6.14	4.50	4	0.88	3/4	2.88	0.81	0.06	0.67	0.87	2.17	2.76	0.67	1.34	0.06	M8	F07
2	50	1.97	5.63	9.06	8.50	6.50	5.00	8	0.75	5/8	3.62	0.88	0.06	0.67	0.87	2.17	2.76	0.67	1.34	0.06	M8	F07
2 1/2	65	2.52	7.05	15.75	9.50	7.50	5.88	8	0.88	3/4	4.12	1.00	0.06	0.87	1.10	2.76	4.02	0.87	1.77	0.08	M10	F10
3	80	3.00	7.44	15.75	11.12	8.25	6.62	8	0.88	3/4	5.00	1.12	0.06	0.87	1.10	2.76	4.02	0.87	1.77	0.08	M10	F10
4	100	3.94	8.82	29.53	12.00	10.00	7.88	8	0.88	3/4	6.19	1.25	0.06	1.06	1.42	3.35	4.92	1.06	2.05	0.08	M12	F12
6	150	5.95	12.40	39.37	15.88	12.50	10.62	12	0.88	3/4	8.50	1.44	0.06	1.42	1.89	3.94	5.51	1.42	2.48	0.08	M16	F14
8	200	7.95	15.98	59.06	19.75	15.00	1300	12	1.00	7/8	10.62	1.62	0.06	1.81	2.36	5.12	6.50	1.81	3.11	0.08	M20	F16

300UTAZM
300UTAZM-FS

MATERIAL LIST

No.	Name of Parts	Materials
1	BODY	A351 Gr. CF8M
3	STEM	A276 TYPE316
4	BALL	A276 TYPE316 or A351 Gr. CF8M
7	GLAND	A351 Gr. CF8
8	GLAND PACKIING	300UTAZM
		PTFE
		300UTAZM-FS
		FLEXIBLE GRAPHITE
9	HANDLE	DUCTILE IRON
16A	NAME PLATE	STAINLESS STEEL
16B	LEV PLATE	STAINLESS STEEL
19A	GASKET	PTFE
19B	GASKET	300UTAZM-FS
		FLEXIBLE GRAPHITE
20	PACKING WASHER	A276 TYPE316L
29	INSERT	A351 Gr. CF8M or A182 Gr. F316 or A276 TYPE316
30	BALL SEAT	HYPATITE® PTFE
36	GLAND BOLT	STAINLESS STEEL
40	KEYLOCK PLATE	STAINLESS STEEL
43	HANDLELOCK PLATE	STAINLESS STEEL
48	SNAP RING	STAINLESS STEEL
49	STOPPER	STAINLESS STEEL
51	STOPPER PLATE	STAINLESS STEEL
57	GLAND BUSHING	G/F PTFE
58	GLAND WASHER	A276 TYPE304
67	STEM BEARING	G/F PTFE
123	HANDLELOCK PLATE BOLT	STAINLESS STEEL
124	SPRING & PIN	A313 & A276 TYPE316
126	STOPPER PLATE BOLT	STAINLESS STEEL
145	CONED DISC SPRINGS	INCONEL® 718 or EQUIVALENT
216A	CE PLATE	STAINLESS STEEL
216B	ATEX PLATE	STAINLESS STEEL

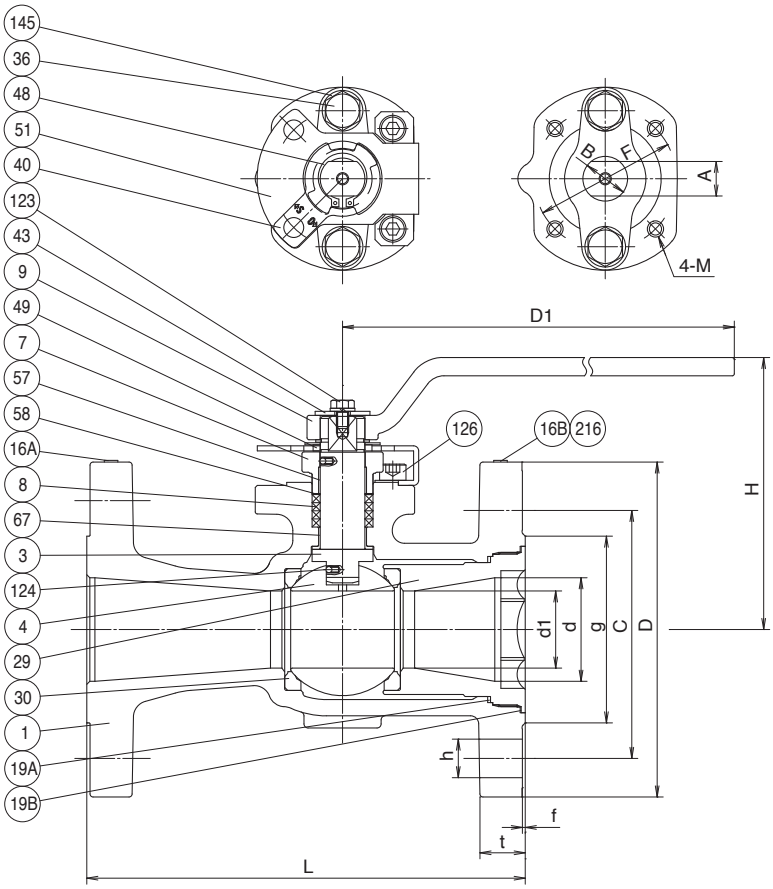

NOTE

(1) Dimensions A and B are in accordance with CAPI F03-S

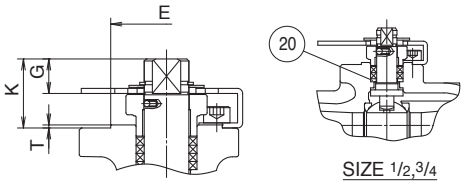

DIMENSIONS

Unit : inch

Nominal Size							End Flange								Mounting Dimensions for Actuator								
								Bolt Hole															
in.	mm	d	d1	H	D1	L	D	C	No.	h	Bolt Size	g	t	f	A	B	E	F	G	K	T	M	ISO 5211 Flange Type
1/2	15	0.49	0.39	3.62	5.12	5.50	3.75	2.62	4	0.62	1/2	1.38	0.56	0.06	0.276	0.394	0.985	1.417	0.33	0.71	0.04	M5	F03(1)
3/4	20	0.75	0.49	3.74	5.12	6.00	4.62	3.25	4	0.75	5/8	1.69	0.62	0.06	0.276	0.394	0.985	1.417	0.33	0.71	0.04	M5	F03(1)
1	25	0.98	0.69	4.33	5.12	6.50	4.88	3.50	4	0.75	5/8	2.00	0.69	0.06	0.355	0.473	0.985	1.417	0.35	0.87	0.04	M5	F03

300UTAZM
300UTAZM-FS

MATERIAL LIST

No.	Name of Parts	Materials
1	BODY	A351 Gr. CF8M
3	STEM	A276 TYPE316
4	BALL	A276 TYPE316 or A351 Gr. CF8M
7	GLAND	A351 Gr. CF8
8	GLAND PACKIING	300UTAZM
		PTFE
		300UTAZM-FS
		FLEXIBLE GRAPHITE
9	HANDLE	DUCTILE IRON(UP TO SIZE 4)
9A	HANDLE BAR	CARBON STEEL(SIZE 6& OVER)
9B	HANDLE HEAD	DUCTILE IRON(SIZE 6& OVER)
16A	NAME PLATE	STAINLESS STEEL
16B	LEV PLATE	STAINLESS STEEL
19A	GASKET	PTFE
19B		300UTAZM-FS
		FLEXIBLE GRAPHITE
20	PACKING WASHER	A276 TYPE316L(SIZE 1 1/2 ONLY)
29	INSERT	A351 Gr. CF8M or A182 Gr. F316 or A276 TYPE316
30	BALL SEAT	HYPATITE® PTFE
36	GLAND BOLT	STAINLESS STEEL
40	KEYLOCK PLATE	STAINLESS STEEL
43	HANDLELOCK PLATE	STAINLESS STEEL
48	SNAP RING	STAINLESS STEEL
49	STOPPER	STAINLESS STEEL
51	STOPPER PLATE	STAINLESS STEEL
57	GLAND BUSHING	G/F PTFE
58	GLAND WASHER	A276 TYPE304
67	STEM BEARING	G/F PTFE
123A	HANDLELOCK PLATE BOLT	STAINLESS STEEL
123B	HANDLE BOLT	STAINLESS STEEL
124	SPRING & PIN	A313 & A276 TYPE316
126	STOPPER PLATE BOLT	STAINLESS STEEL
145	CONED DISC SPRINGS	INCONEL® 718 or EQUIVALENT
216A	CE PLATE	STAINLESS STEEL
216B	ATEX PLATE	STAINLESS STEEL

NOTE

(1) Dimensions A and B are in accordance with CAPI F03-S

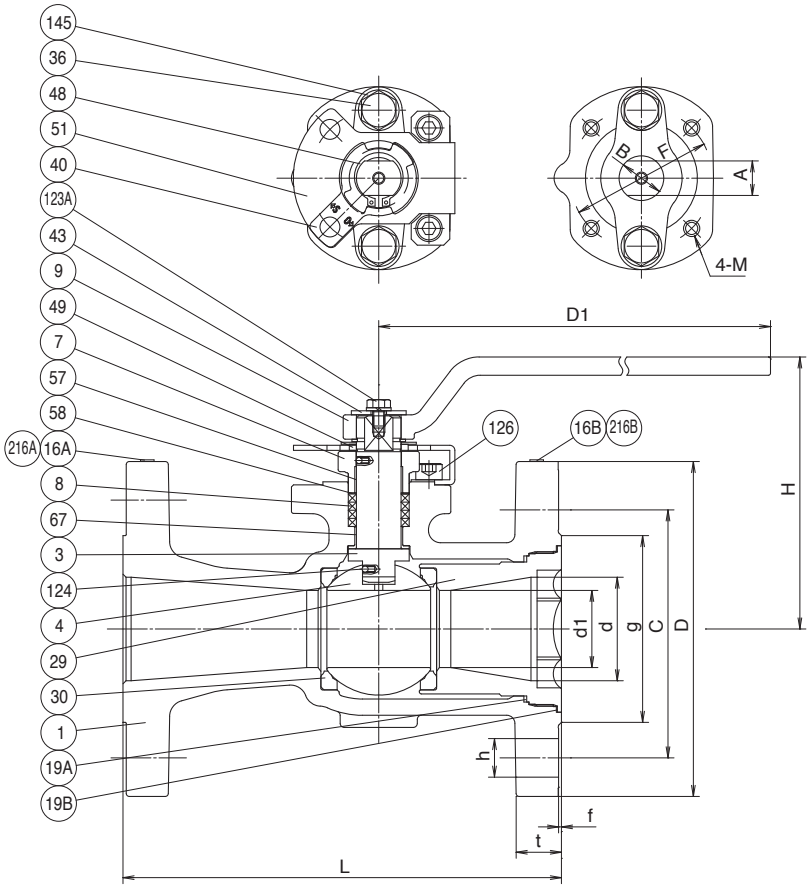

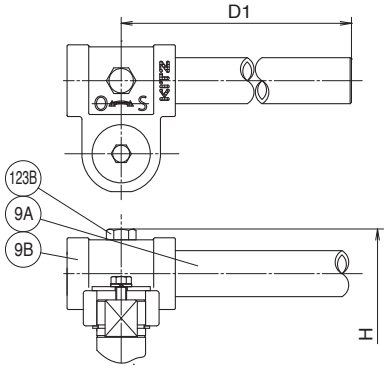

SIZE 6 & OVER

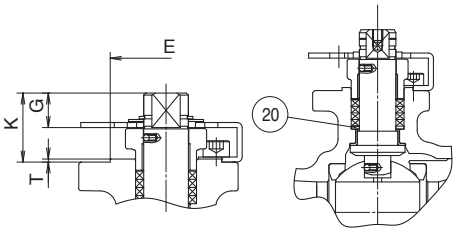

SIZE 1 1/2 ONLY

DIMENSIONS

Unit : inch

Nominal Size							End Flange								Mounting Dimensions for Actuator								
								Bolt Hole															
in.	mm	d	d1	H	D1	L	D	C	No.	h	Bolt Size	g	t	f	A	B	E	F	G	K	T	M	ISO 5211 Flange Type
1 1/2	40	1.50	1.18	5.00	6.30	7.5	6.12	4.50	4	0.88	3/4	2.88	0.81	0.06	0.552	0.709	1.378	1.969	0.55	1.18	0.06	M6	F05
2	50	2.00	1.50	5.28	9.06	8.5	6.50	5.00	8	0.75	5/8	3.62	0.88	0.06	0.670	0.867	2.166	2.756	0.67	1.34	0.06	M8	F07
3	80	3.00	2.28	6.81	15.75	11.12	8.25	6.62	8	0.88	3/4	5.00	1.12	0.06	0.867	1.103	2.756	4.016	0.87	1.77	0.08	M10	F10
4	100	4.00	3.00	7.44	15.75	12.0	10.00	7.88	8	0.88	3/4	6.19	1.25	0.06	0.867	1.103	2.756	4.016	0.87	1.77	0.08	M10	F10
6	150	6.00	3.94	9.88	29.53	15.88	12.50	10.62	12	0.88	3/4	8.50	1.44	0.06	1.063	1.418	3.347	4.921	1.06	2.05	0.08	M12	F12
8	200	8.00	5.94	12.40	39.37	16.5	15.00	13.00	12	1.00	7/8	10.62	1.62	0.06	1.418	1.890	3.937	5.512	1.42	2.48	0.08	M16	F14
10	250	10.00	7.36	15.43	59.06	18.0	17.50	15.25	16	1.12	1	12.75	1.88	0.06	1.811	2.362	5.118	6.496	1.81	3.11	0.08	M20	F16

G-300UTAZM
G-300UTAZM-FS

KITZ

MATERIAL LIST

No.	Name of Parts	Materials
1	BODY	A351 Gr. CF8M
3	STEM	A276 TYPE316
4	BALL	A351 Gr. CF8M
7	GLAND	A351 Gr. CF8
8	GLAND PACKIING	G-300UTAZM
		PTFE
		G-300UTAZM-FS
		FLEXIBLE GRAPHITE
16A	NAME PLATE	STAINLESS STEEL
16B	LEV PLATE	STAINLESS STEEL
19A	GASKET	PTFE
19B		G-300UTAZM-FS
		FLEXIBLE GRAPHITE
29	INSERT	A351 Gr. CF8M
30	BALL SEAT	HYPATITE® PTFE
36	GLAND BOLT	STAINLESS STEEL
57	GLAND BUSHING	G/F PTFE
58	GLAND WASHER	A276 TYPE304
60	KEY	CARBON STELL
67	STEM BEARING	G/F PTFE
92	CONNECTOR	CARBON STEEL
93	BRAKET	CARBON STEEL
99	BOLT	CARBON STEEL
102	GEAR UNIT	
124	SPRING & PIN	A313 & A276 TYPE316
145	CONED DISC SPRINGS	INCONEL® 718 or EQUIVALENT
216A	CE PLATE	STAINLESS STEEL
216B	ATEX PLATE	STAINLESS STEEL

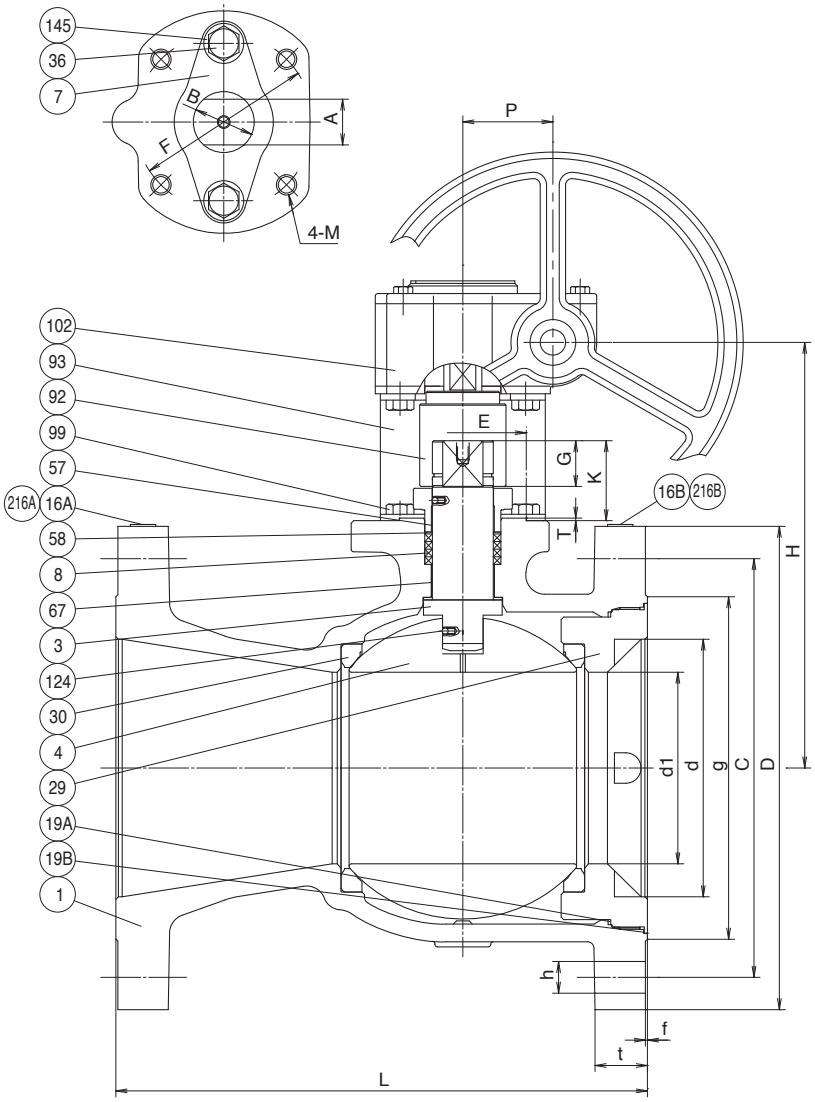

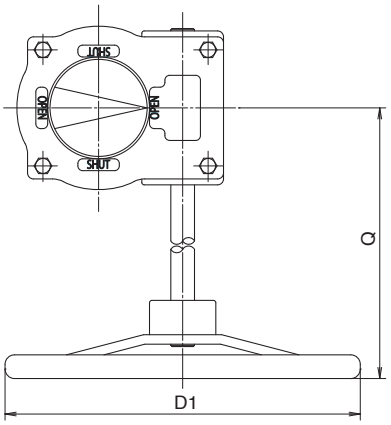

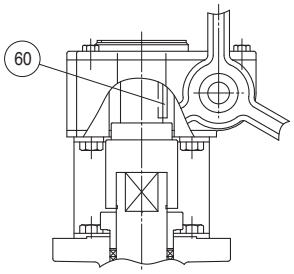

SIZE 10 ONLY

DIMENSIONS

Unit : inch

Nominal Size							End Flange								Mounting Dimensions for Actuator										
								Bolt Hole																	
in.	mm	d	d1	H	D1	L	D	C	No.	h	Bolt Size	g	t	f	P	Q	A	B	E	F	G	K	T	M	ISO 5211 Flange Type
10	250	10.00	7.36	15.75	15.75	18.00	17.5	15.25	16	1.12	1	12.75	1.88	0.06	3.39	13.27	1.811	2.362	5.118	6.496	1.81	3.11	0.08	M20	F16

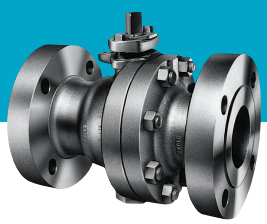

600UTBM
600UTBM-FS

MATERIAL LIST

No.	Name of Parts	Materials
1	BODY	A351 Gr. CF8M
2	BODY CAP	A351 Gr. CF8M
3	STEM	A276 TYPE 316
4	BALL	A276 TYPE 316
7	GLAND	A351 Gr. CF8
8	GLAND PACKING	600UTBM
		PTFE
		600UTBM-FS
		FLEXIBLE GRAPHITE
19	GASKET	600UTBM-FS
		FLEXIBLE GRAPHITE SPIRAL WOUND
9	HANDLE	DUCTILE IRON
20	PACKING WASHER	A276 TYPE 316
30	BALL SEAT	G/F MoS_2 PTFE
33	CAP NUT	A194 Gr. 8M
35	CAP BOLT	A193 Gr. B8M
36	GLAND BOLT	A193 Gr. B8
45 A	O RING	FKM
45 B	O RING	FKM
47	THRUST WASHER	METAL BACKED PTFE
48	SNAP RING	A276 TYPE 304
49	STOPPER	A276 TYPE 304
67	STEM BEARING	G/F PTFE
124 A	SPRING & PIN	A313 & A276 TYPE 316
124 B	RING SPRING	A276 TYPE 316
143	SEAT SPRING	INCONEL® X-750
150	SEAT RETAINER	A276 TYPE 304
155	SPACER	600UTBM-FS
		PTFE
175	RETAINER GLAND	600UTBM-FS
		A276 TYPE 316
176	RETAINER PACKING	600UTBM-FS
		FLEXIBLE GRAPHITE

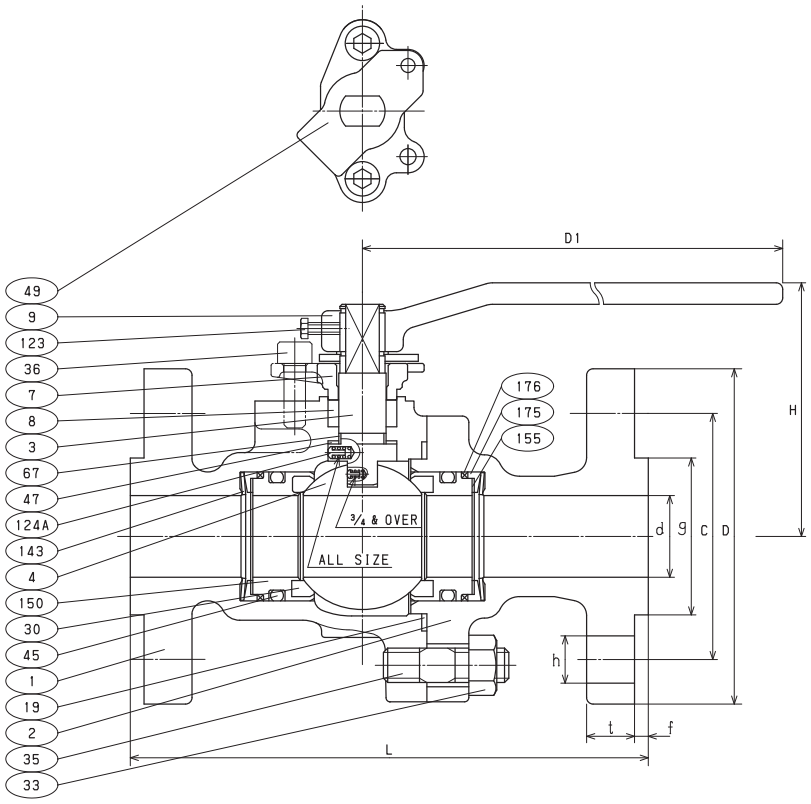

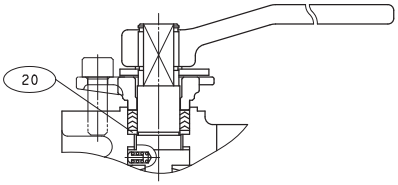

UP TO SIZE 1

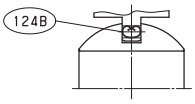

SIZE 1/2 ONLY

DIMENSIONS

Unit : inch

Nominal Size						End Flange							
							Bolt Hole						
in.	mm	d	H	D1	L	D	C	No.	h	Bolt Size	g	t	f
1/2	15	0.51	4.13	5.12	6.50	3.75	2.62	4	0.62	1/2	1.38	0.56	0.25
3/4	20	0.75	4.25	5.12	7.50	4.62	3.25	4	0.75	5/8	1.69	0.62	0.25
1	25	0.98	5.12	6.30	8.50	4.88	3.50	4	0.75	5/8	2.00	0.69	0.25
1 1/2	40	1.50	4.65	9.06	9.50	6.12	4.50	4	0.88	3/4	2.88	0.88	0.25

1500UTBM
1500UTBM-FS

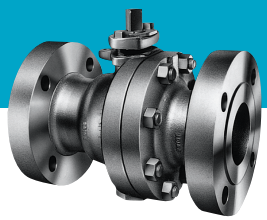

MATERIAL LIST

No.	Name of Parts	Materials
1	BODY	A351 Gr. CF8M
2	BODY CAP	A351 Gr. CF8M
3	STEM	A276 TYPE 316
4	BALL	A276 TYPE 316
7	GLAND	A351 Gr. CF8
8	GLAND PACKING	1500UTBM
		PTFE
		1500UTBM-FS
		FLEXIBLE GRAPHITE
9	HANDLE	DUCTILE IRON
19	GASKET	1500UTBM-FS
		FLEXIBLE GRAPHITE SPIRAL WOUND
30	BALL SEAT	MoS_2 NYLON
31	STEM WASHER	A276 TYPE 316
33	CAP NUT	A194 Gr. 8M
35	CAP BOLT	A193 Gr. B8M
36	GLAND BOLT	A193 Gr. B8
45 A	O RING	FKM
45 B	O RING	FKM
47	THRUST WASHER	METAL BACKED PTFE
49	STOPPER	A276 TYPE 304
67	STEM BEARING	G/F PTFE
85	PLUG	A276 TYPE 316
123	HANDLE BOLT	CARBON STEEL
124	SPRING & PIN	A313 & A276 TYPE 316
143	SEAT SPRING	INCONEL® X-750
146	BACK-UP RING	PTFE
150	SEAT RETAINER	A276 TYPE 316
155	SPACER	1500UTBM-FS
		PTFE
175	RETAINER GLAND	1500UTBM-FS
		A276 TYPE 316
176	RETAINER PACKING	1500UTBM-FS
		FLEXIBLE GRAPHITE

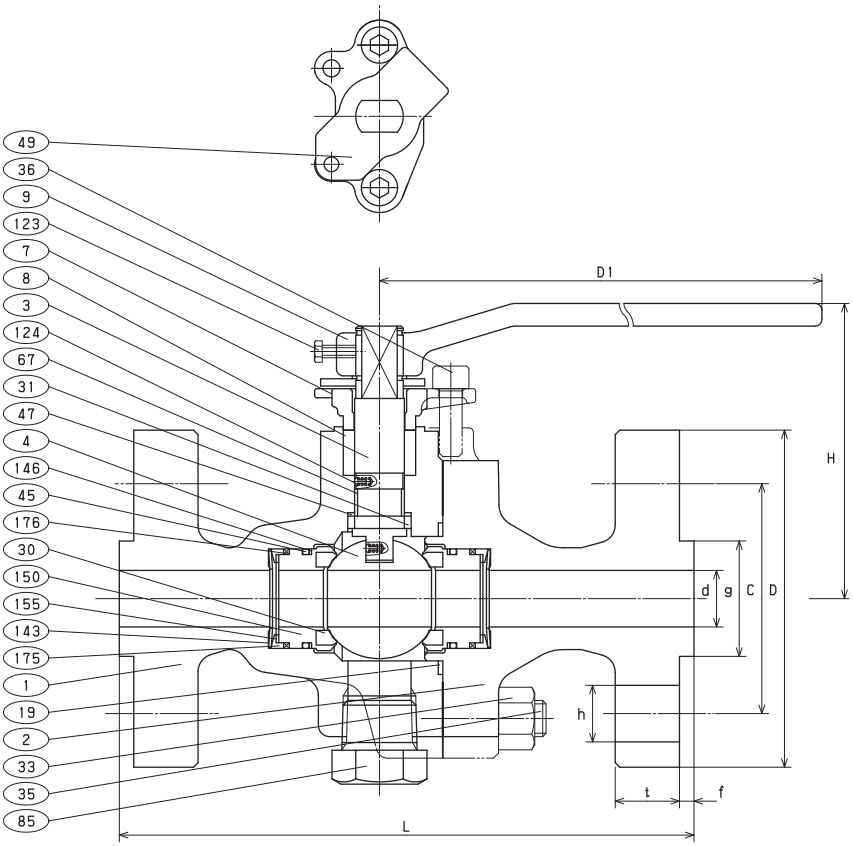

DIMENSIONS

Unit : inch

Nominal Size						End Flange							
							Bolt Hole						
in.	mm	d	H	D1	L	D	C	No.	h	Bolt Size	g	t	f
1/2	15	0.51	5.20	6.30	8.50	4.75	3.25	4	0.88	3/4	1.38	0.88	0.25
3/4	20	0.75	4.61	9.06	9.00	5.12	3.50	4	0.88	3/4	1.69	1.00	0.25
1	25	0.98	4.84	9.06	10.00	5.88	4.00	4	1.00	7/8	2.00	1.12	0.25
1 1/2	40	1.50	6.18	15.7	12.00	7.00	4.88	4	1.12	1	2.88	1.25	0.25

Steel Ball Valves (Cryogenic or Cold Service)

150UTALM

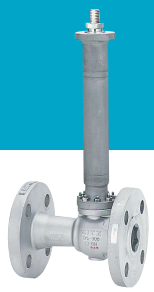

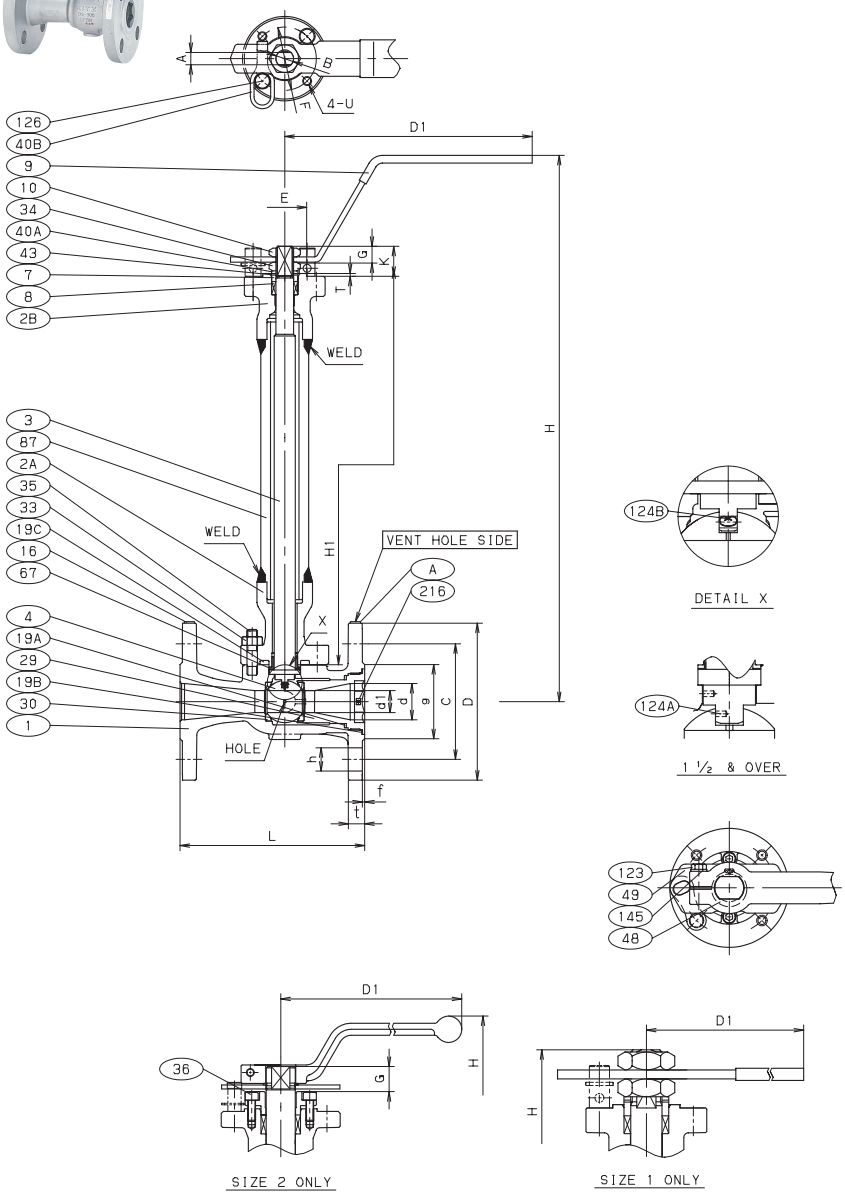

MATERIAL LIST

No.	Name of Parts	Materials
1	BODY	A351 Gr. CF8M
2 A	BONNET	A276 TYPE 316 or A479 TYPE 316
2 B	BONNET	A276 TYPE 316 or A479 TYPE 316
3	STEM	A564 TYPE 630
4	BALL	A276 TYPE 316
7	GLAND	A276 TYPE 316 or A479 TYPE 316
		(SIZE 1/2-1 1/2)
		A351 Gr. CF8M or A276 TYPE 316
		or A479 TYPE 316 (SIZE 2 ONLY)
8	GLAND PACKING	(1)
9	HANDLE	STAINLESS STEEL (2) (SIZE 1/2-1 1/2)
		DUCTILE IRON (SIZE 2 ONLY)
10	HANDLE NUT	STAINLESS STEEL
16	NAME PLATE	STAINLESS STEEL
19 A	GASKET	PTFE
19 B	GASKET	FLEXIBLE GRAPHITE
19 C	GASKET	(3)
29	INSERT	A182 Gr. F316 (SIZE 1/2-1 1/2)
		A351 Gr. CF8M (SIZE 2 ONLY)
30	BALL SEAT	HYPATITE® PTFE
33	BONNET NUT	A194 Gr. 8M
34	GLAND NUT	STAINLESS STEEL
35	BONNET BOLT	A320 Gr. B8M
36	GLAND BOLT	A193 Gr. B8M
40 A	LOCK PLATE	STAINLESS STEEL (SIZE 1/2-1 1/2)
40 B	KEY LOCK PLATE	STAINLESS STEEL
43	CONED DISC SPRINGS	STAINLESS STEEL (SIZE 1/2-1 1/2)
48	SNAP RING	STAINLESS STEEL
49	STOPPER	STAINLESS STEEL
67	STEM BEARING	C/F PTFE (5) (UP TO SIZE 1)
		G/F PTFE (SIZE 1 1/2 & OVER)
87	PIPE	A312 TYPE 316
123	HANDLE BOLT	STAINLESS STEEL
124 A	SPRING & PIN	A313 & A276 TYPE 316
124 B	RING SPRING	A276 TYPE 316 (UP TO SIZE 1)
126	STOPPER PIN	STAINLESS STEEL
145	SPRING WASHER	STAINLESS STEEL
216	PRESSURE DIRECTION PLATE	STAINLESS STEEL
A	VENT HOLE SIDE PLATE	STAINLESS STEEL

NOTE

(1) Flexible graphite cored PTFE braided packing + flexible graphite packing.
(2) Plastic covering.
(3) Flexible graphite spiral wound.
(4) Please install valve so that the arrow indicated should be in the above direction.
(5) Valves have an anti-static stem bearing insuring positive conductivity between body and stem.
(6) Dimensions A and B are not in accordance with ISO 5211.

DIMENSIONS

Unit : inch

Nominal Size						End Flange								Mounting Dimensions for Actuator										
							Bolt Hole																	
in.	mm	d	d1	D1	L	D	C	No.	h	Bolt Size	g	t	f	A	B	E	F	G	K	T	U	ISO 5211 Flange Type	H	H1
1/2	15	0.49	0.39	5.51	4.25	3.50	2.38	4	0.62	1/2	1.38	0.44	0.06	0.28	0.39	0.99	1.42	0.35	0.67	0.06	1/4-20UNC	F03 (6)	12.28	8.86
3/4	20	0.75	0.49	5.51	4.62	3.88	2.75	4	0.62	1/2	1.69	0.44	0.06	0.28	0.39	0.99	1.42	0.35	0.67	0.06	1/4-20UNC	F03 (6)	12.36	8.86
1	25	0.98	0.67	6.30	5.00	4.25	3.12	4	0.62	1/2	2.00	0.44	0.06	0.43	0.55	1.18	1.65	0.51	1.02	0.06	1/4-20UNC	F04	10.55	8.80
1 1/2	40	1.50	1.18	7.09	6.50	5.00	3.88	4	0.62	1/2	2.88	0.56	0.06	0.55	0.71	1.38	1.97	0.55	1.26	0.08	1/4-20UNC	F05	15.94	10.98
2	50	2.00	1.50	9.06	7.00	6.00	4.75	4	0.75	5/8	3.62	0.62	0.06	0.67	0.87	2.17	2.76	0.67	1.34	0.08	5/16-18UNC	F07	16.57	11.42

150UTALM

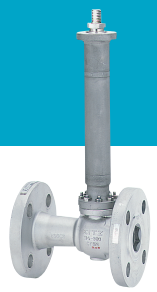

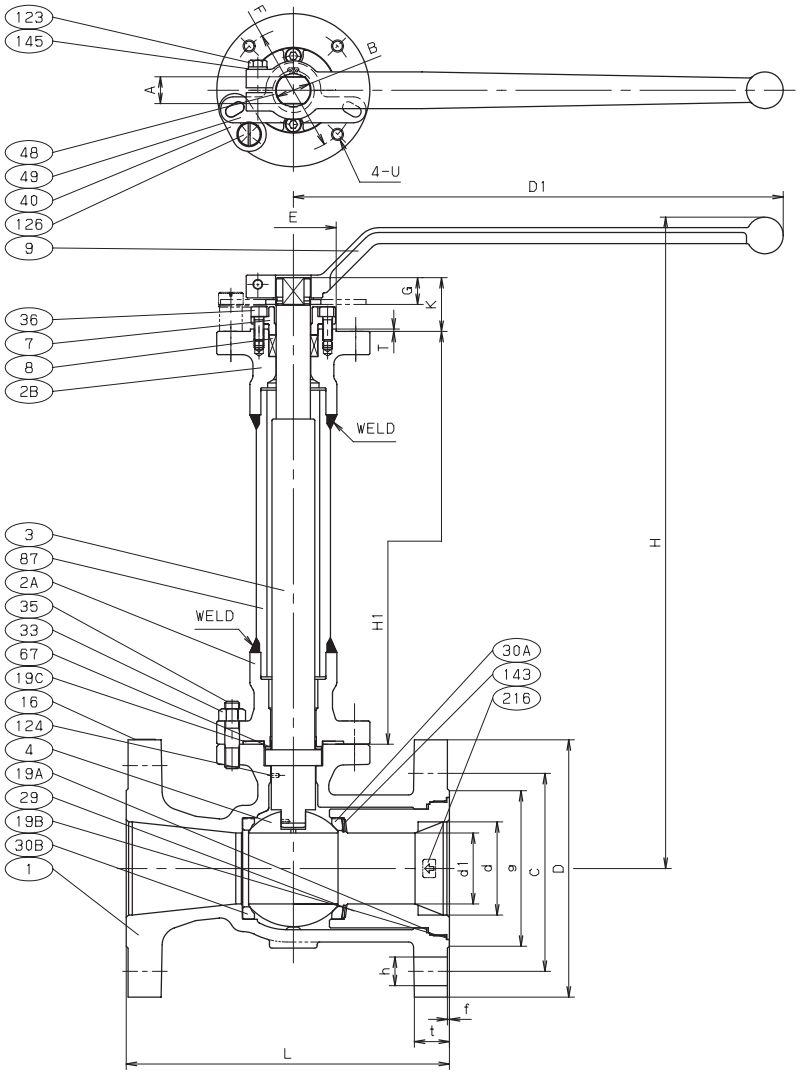

MATERIAL LIST

No.	Name of Parts	Materials
1	BODY	A351 Gr. CF8M
2 A	BONNET	A276 TYPE 316 or A479 TYPE 316
2 B	BONNET	A276 TYPE 316 or A479 TYPE 316
3	STEM	A564 TYPE 630
4	BALL	A351 Gr. CF8M
7	GLAND	A351 Gr. CF8M or A276 TYPE 316
		or A479 TYPE 316
8	GLAND PACKING	(1)
9	HANDLE	DUCTILE IRON
16	NAME PLATE	STAINLESS STEEL
19 A	GASKET	PTFE
19 B	GASKET	FLEXIBLE GRAPHITE
19 C	GASKET	(2)
29	INSERT	A351 Gr. CF8M
30 A	BALL SEAT	HYPATITE® PTFE
30 B	BALL SEAT	HYPATITE® PTFE
33	BONNET NUT	A194 Gr. 8M
35	BONNET BOLT	A320 Gr. B8M
36	GLAND BOLT	A193 Gr. B8M
40	KEY LOCK PLATE	STAINLESS STEEL
48	SNAP RING	STAINLESS STEEL
49	STOPPER	STAINLESS STEEL
67	STEM BEARING	G/F PTFE
87	PIPE	A312 TYPE 316
123	HANDLE BOLT	STAINLESS STEEL
124	SPRING & PIN	STAINLESS STEEL
126	STOPPER PIN	STAINLESS STEEL
143	SEAT SPRING	UNS NO7750
145	SPRING WASHER	STAINLESS STEEL
216	PRESSURE DIRECTION PLATE	STAINLESS STEEL

NOTE

(1) Flexible graphite cored PTFE braided packing + flexible graphite packing.

(2) Flexible graphite spiral wound.

(3) Please install valve so that the arrow indicated should be in the above direction.

DIMENSIONS

Unit : inch

Nominal Size						End Flange								Mounting Dimensions for Actuator										
							Bolt Hole																	
in.	mm	d	d1	D1	L	D	C	No.	h	Bolt Size	g	t	f	A	B	E	F	G	K	T	U	ISO 5211 Flange Type	H	H1
3	80	3.00	2.28	15.75	8.00	7.50	6.00	4	0.75	5/8	5.00	0.75	0.06	0.87	1.10	2.76	4.02	0.87	1.73	0.08	3/8-16UNC	F10	20.94	13.27
4	100	4.00	3.00	15.75	9.00	9.00	7.50	8	0.75	5/8	6.19	0.94	0.06	0.87	1.10	2.76	4.02	0.87	1.73	0.08	3/8-16UNC	F10	21.57	13.27

G-150UTALM

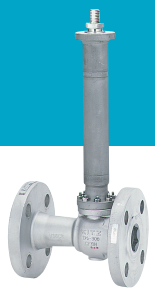

MATERIAL LIST

No.	Name of Parts	Materials
1	BODY	A351 Gr. CF8M
2 A	BONNET	A276 TYPE 316 or A479 TYPE 316
2 B	BONNET	A276 TYPE 316 or A479 TYPE 316
3	STEM	A564 TYPE 630
4	BALL	A351 Gr. CF8M
7	GLAND	A351 Gr. CF8M or A276 TYPE 316
		or A479 TYPE 316
8	GLAND PACKING	(1)
16	NAME PLATE	STAINLESS STEEL
19 A	GASKET	PTFE
19 B	GASKET	FLEXIBLE GRAPHITE
19 C	GASKET	(2)
29	INSERT	A351 Gr. CF8M
30 A	BALL SEAT	HYPATITE® PTFE
30 B	BALL SEAT	HYPATITE® PTFE
33	BONNET NUT	A194 Gr. 8M
35	BONNET BOLT	A320 Gr. B8M
36	GLAND BOLT	A193 Gr. B8M
67	STEM BEARING	G/F PTFE
87	PIPE	A312 TYPE 316
92	CONNECTOR	CARBON STEEL
93	BRACKET	CARBON STEEL
99	BOLT	CARBON STEEL
102	GEAR UNIT	
124	SPRING & PIN	A313 or A276 TYPE 316
138	BOLT	CARBON STEEL
143	SEAT SPRING	UNS NO7750
216	PRESSURE DIRECTION PLATE	STAINLESS STEEL

NOTE

(1) Flexible graphite cored PTFE braided packing + flexible graphite packing.

(2) Flexible graphite spiral wound.

(3) Please install valve so that the arrow indicated should be in the above direction.

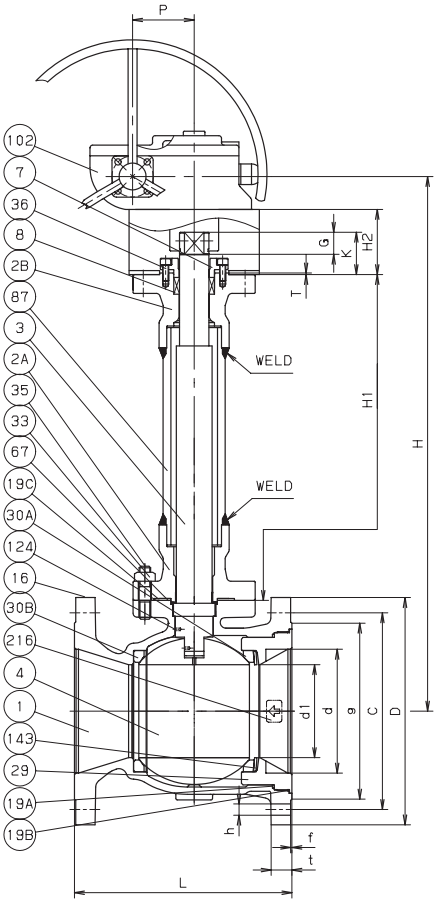

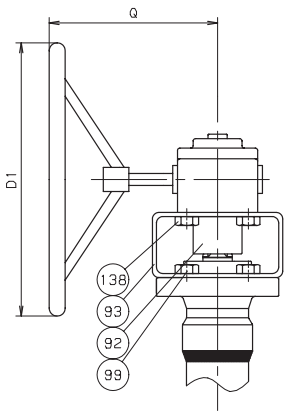

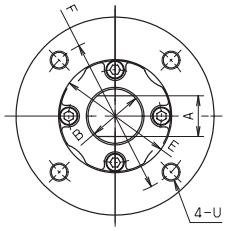

ACTUATOR MOUNTING

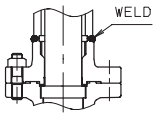

SIZE 8, 10

DIMENSIONS

Unit : inch

Nominal Size				End Flange										Mounting Dimensions for Actuator								
					Bolt Hole																	
in.	mm	d	d1	D	C	No.	h	Bolt Size	g	t	f	P	Q	A	B	E	F	G	K	T	U	ISO 5211 Flange Type
6	150	6.00	4.49	11.00	9.50	8	0.88	3/4	8.50	1.00	0.06	3.39	13.39	1.06	1.42	3.35	4.92	1.06	2.05	0.08	1/2-13UNC	F12
8	200	8.00	5.67	13.50	11.75	8	0.88	3/4	10.62	1.12	0.06	3.39	13.39	1.42	1.89	3.94	5.51	1.42	2.54	0.08	5/8-11UNC	F14
10	250	10.00	7.36	16.00	14.25	12	1.00	7/8	12.75	1.19	0.06	5.12	14.37	1.81	2.36	5.12	6.50	1.81	3.07	0.08	3/4-10UNC	F16

Nominal Size						
in.	mm	H	H1	H2	L	D1
6	150	25.91	15.75	3.15	15.50	15.75
8	200	28.05	15.94	3.94	18.00	15.75
10	250	32.93	18.11	4.72	21.00	19.69

300UTALM

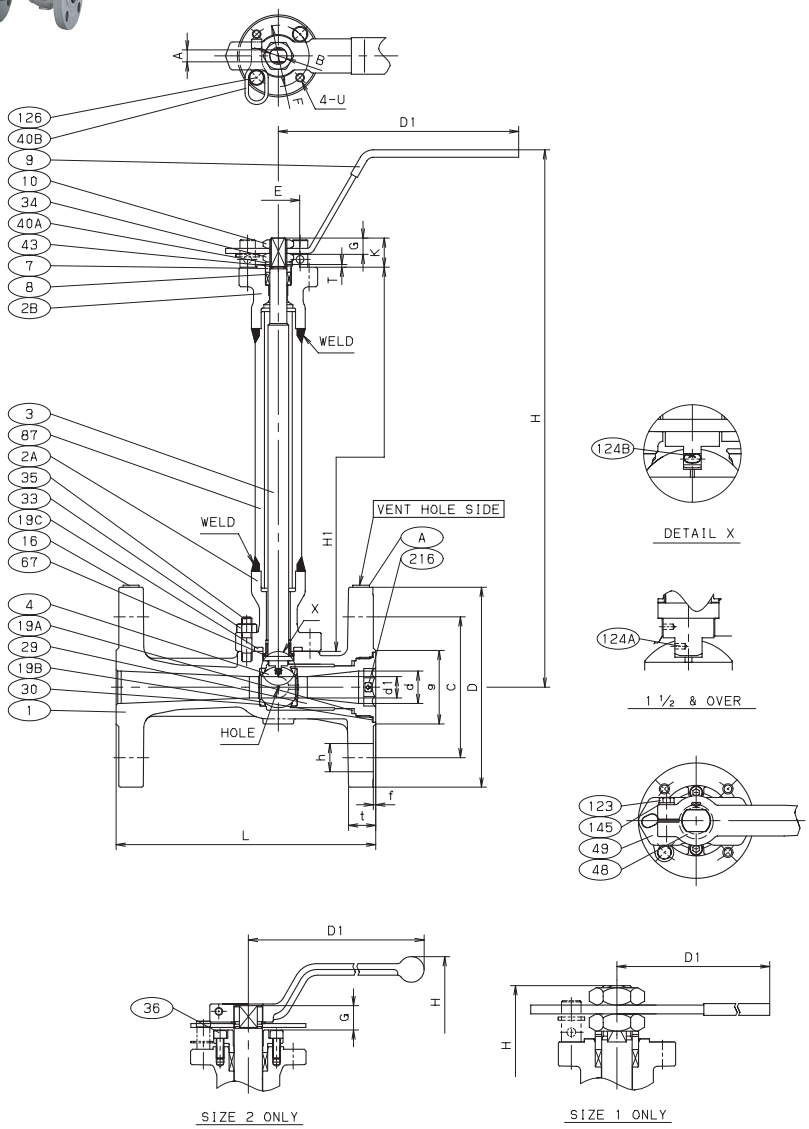

MATERIAL LIST

No.	Name of Parts	Materials
1	BODY	A351 Gr. CF8M
2 A	BONNET	A276 TYPE 316 or A479 TYPE 316
2 B	BONNET	A276 TYPE 316 or A479 TYPE 316
3	STEM	A564 TYPE 630
4	BALL	A276 TYPE 316 or A479 TYPE 316
7	GLAND	A276 TYPE 316 or A479 TYPE 316
		(SIZE 1/2-1 1/2)
		A351 Gr. CF8M (SIZE 2 ONLY)
8	GLAND PACKING	(1)
9	HANDLE	STAINLESS STEEL (2) (SIZE 1/2-1 1/2)
		DUCTILE IRON (SIZE 2 ONLY)
10	HANDLE NUT	STAINLESS STEEL
16	NAME PLATE	STAINLESS STEEL
19 A	GASKET	PTFE
19 B	GASKET	FLEXIBLE GRAPHITE
19 C	GASKET	(3)
29	INSERT	A351 Gr. CF8M
30	BALL SEAT	HYPATITE® PTFE
33	BONNET NUT	A194 Gr. 8M
34	GLAND NUT	STAINLESS STEEL
35	BONNET BOLT	A320 Gr. B8M
36	GLAND BOLT	A193 Gr. B8M
40 A	LOCK PLATE	STAINLESS STEEL (SIZE 1/2-1 1/2)
40 B	KEY LOCK PLATE	STAINLESS STEEL
43	CONED DISC SPRINGS	STAINLESS STEEL (SIZE 1/2-1 1/2)
48	SNAP RING	STAINLESS STEEL
49	STOPPER	STAINLESS STEEL
67	STEM BEARING	C/F PTFE (5) (UP TO SIZE 1)
		G/F PTFE (SIZE 1 1/2 & OVER)
87	PIPE	A312 TYPE 316L
123	HANDLE BOLT	STAINLESS STEEL
124 A	SPRING & PIN	A313 & A276 TYPE 316
124 B	RING SPRING	A276 TYPE 316 (UP TO SIZE 1)
126	STOPPER PIN	STAINLESS STEEL
145	SPRING WASHER	STAINLESS STEEL
216	PRESSURE DIRECTION PLATE	STAINLESS STEEL
A	VENT HOLE SIDE PLATE	STAINLESS STEEL

NOTE

(1) Flexible graphite cored PTFE braided packing + flexible graphite packing.
(2) Plastic covering.
(3) Flexible graphite spiral wound.
(4) Please install valve so that the arrow indicated should be in the above direction.
(5) Valves have an anti-static stem bearing insuring positive conductivity between body and stem.

DIMENSIONS

Unit : inch

Nominal Size						End Flange								Mounting Dimensions for Actuator										
							Bolt Hole																	
in.	mm	d	d1	D1	L	D	C	No.	h	Bolt Size	g	t	f	A	B	E	F	G	K	T	U	ISO 5211 Flange Type	H	H1
1/2	15	0.49	0.39	5.51	5.50	3.75	2.62	4	0.62	1/2	1.38	0.56	0.06	0.28	0.39	0.99	1.42	0.35	0.67	0.06	1/4-20UNC	F03	12.28	8.86
3/4	20	0.75	0.49	5.51	6.00	4.62	3.25	4	0.75	5/8	1.69	0.62	0.06	0.28	0.39	0.99	1.42	0.35	0.67	0.06	1/4-20UNC	F03	12.36	8.86
1	25	0.98	0.67	6.30	6.50	4.88	3.50	4	0.75	5/8	2.00	0.69	0.06	0.43	0.55	1.18	1.65	0.51	1.02	0.06	1/4-20UNC	F04	10.55	8.80
1 1/2	40	1.50	1.18	7.09	7.50	6.12	4.50	4	0.88	3/4	2.88	0.81	0.06	0.55	0.71	1.38	1.97	0.55	1.26	0.08	1/4-20UNC	F05	15.94	10.98
2	50	2.00	1.50	9.06	8.50	6.50	5.00	8	0.75	5/8	3.62	0.88	0.06	0.67	0.87	2.17	2.76	0.67	1.34	0.08	5/16-18UNC	F07	16.57	11.42

300UTALM

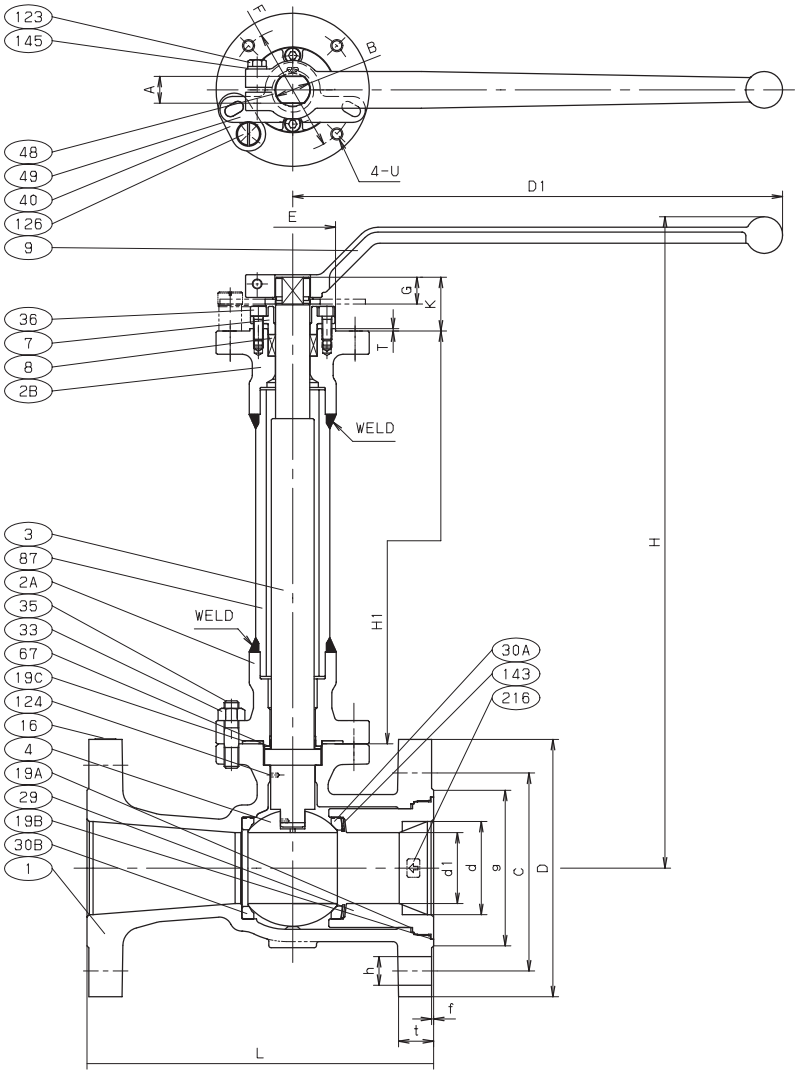

MATERIAL LIST

No.	Name of Parts	Materials
1	BODY	A351 Gr. CF8M
2 A	BONNET	A276 TYPE 316 or A479 TYPE 316
2 B	BONNET	A276 TYPE 316 or A479 TYPE 316
3	STEM	A564 TYPE 630
4	BALL	A351 Gr. CF8M
7	GLAND	A351 Gr. CF8M
8	GLAND PACKING	(1)
9	HANDLE	DUCTILE IRON
16	NAME PLATE	STAINLESS STEEL
19 A	GASKET	PTFE
19 B	GASKET	FLEXIBLE GRAPHITE
19 C	GASKET	(3)
29	INSERT	A182 Gr. F316
30 A	BALL SEAT	HYPATITE® PTFE
30 B	BALL SEAT	HYPATITE® PTFE
33	BONNET NUT	A194 Gr. 8M
35	BONNET BOLT	A320 Gr. B8M
36	GLAND BOLT	A193 Gr. B8M
40	KEY LOCK PLATE	STAINLESS STEEL
48	SNAP RING	STAINLESS STEEL
49	STOPPER	STAINLESS STEEL
67	STEM BEARING	G/F PTFE
87	PIPE	A312 TYPE 316L
123	HANDLE BOLT	STAINLESS STEEL
124	SPRING & PIN	STAINLESS STEEL
126	STOPPER PIN	STAINLESS STEEL
143	SEAT SPRING	UNS NO7750
145	SPRING WASHER	STAINLESS STEEL
216	PRESSURE DIRECTION PLATE	STAINLESS STEEL

NOTE

(1) Flexible graphite cored PTFE braided packing + flexible graphite packing.

(2) Flexible graphite spiral wound.

(3) Please install valve so that the arrow indicated should be in the above direction.

DIMENSIONS

Unit : inch

Nominal Size						End Flange								Mounting Dimensions for Actuator										
							Bolt Hole																	
in.	mm	d	d1	D1	L	D	C	No.	h	Bolt Size	g	t	f	A	B	E	F	G	K	T	U	ISO 5211 Flange Type	H	H1
3	80	3.00	2.28	15.75	11.12	8.25	6.62	8	0.88	3/4	5.00	1.12	0.06	0.87	1.10	2.76	4.02	0.87	1.73	0.08	3/8-16UNC	F10	20.94	13.27
4	100	4.00	3.00	15.75	12.00	10.00	7.88	8	0.88	3/4	6.19	1.25	0.06	0.87	1.10	2.76	4.02	0.87	1.73	0.08	3/8-16UNC	F10	21.57	13.27

G-300UTALM

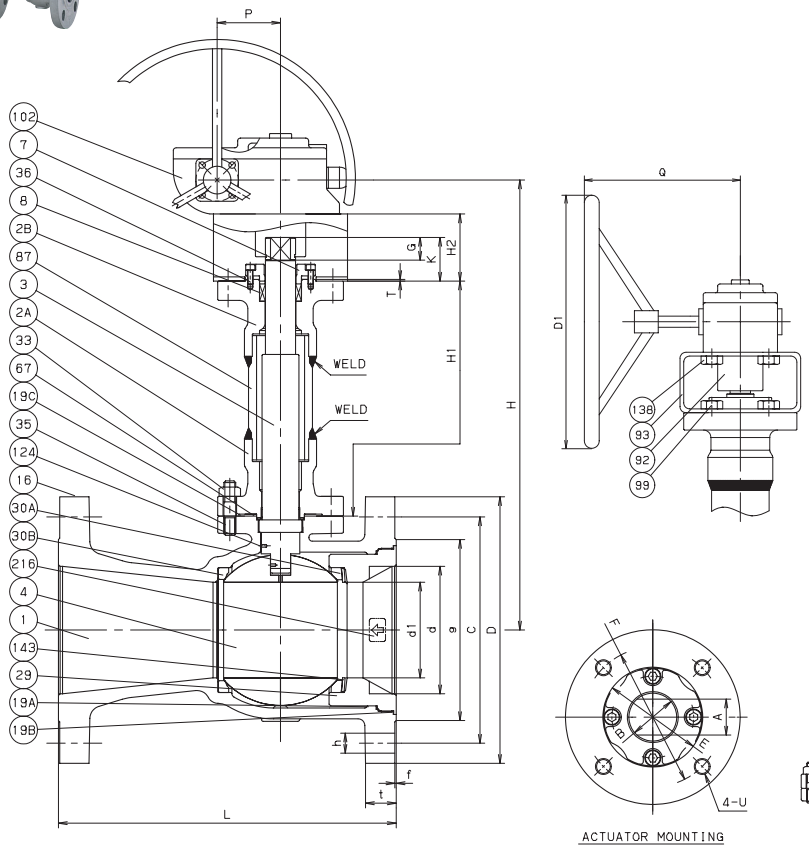

MATERIAL LIST

No.	Name of Parts	Materials
1	BODY	A351 Gr. CF8M
2 A	BONNET	A276 TYPE 316 or A479 TYPE 316
2 B	BONNET	A276 TYPE 316 or A479 TYPE 316
3	STEM	A564 TYPE 630
4	BALL	A351 Gr. CF8M
7	GLAND	A351 Gr. CF8M
8	GLAND PACKING	(1)
16	NAME PLATE	STAINLESS STEEL
19 A	GASKET	PTFE
19 B	GASKET	FLEXIBLE GRAPHITE
19 C	GASKET	(2)
29	INSERT	A351 Gr. CF8M
30 A	BALL SEAT	HYPATITE® PTFE
30 B	BALL SEAT	HYPATITE® PTFE
33	BONNET NUT	A194 Gr. 8M
35	BONNET BOLT	A320 Gr. B8M
36	GLAND BOLT	A193 Gr. B8M
67	STEM BEARING	G/F PTFE
87	PIPE	A312 TYPE 316L
92	CONNECTOR	STAINLESS STEEL
93	BRACKET	CARBON STEEL
99	BOLT	CARBON STEEL
102	GEAR UNIT	
124	SPRING & PIN	A313 or A276 TYPE 316
138	BOLT	CARBON STEEL
143	SEAT SPRING	UNS NO7750
216	PRESSURE DIRECTION PLATE	STAINLESS STEEL

NOTE

(1) Flexible graphite cored PTFE braided packing + flexible graphite packing.

(2) Flexible graphite spiral wound.

(3) Please install valve so that the arrow indicated should be in the above direction.

DIMENSIONS

Unit : inch

Nominal Size				End Flange										Mounting Dimensions for Actuator								
					Bolt Hole																	
in.	mm	d	d1	D	C	No.	h	Bolt Size	g	t	f	P	Q	A	B	E	F	G	K	T	U	ISO 5211 Flange Type
6	150	6.00	4.49	12.50	10.62	12	0.88	3/4	8.50	1.44	0.06	5.12	14.37	1.06	1.42	3.35	4.92	1.06	2.05	0.08	1/2-13UNC	F12
8	200	8.00	5.67	15.00	13.00	12	1.00	7/8	10.62	1.62	0.06	5.12	14.37	1.42	1.89	3.94	5.51	1.42	2.54	0.08	5/8-11UNC	F14
10	250	10.00	7.36	17.50	15.25	16	1.12	1	12.75	1.88	0.06	8.31	16.73	1.81	2.36	5.12	6.50	1.81	3.07	0.08	3/4-10UNC	F16

Nominal Size						
in.	mm	H	H1	H2	L	D1
6	150	28.00	15.75	4.72	15.88	19.69
8	200	29.35	15.94	4.72	16.50	19.69
10	250	32.93	18.11	4.72	18.00	19.69

AKSCTKZM-FS
CODE NO. 119

KITZ

MATERIAL LIST

No.	Name of Parts	Materials
1	BODY	A216 Gr. WCB
3	STEM	A276 TYPE 316
4	BALL	A276 TYPE 316
7	GLAND	A276 TYPE 304
8	GLAND PACKING	FLEXIBLE GRAPHITE
9	HANDLE	CARBON STEEL (1)
10	NUT	A194 Gr. 8
16	WASHER	A276 TYPE 304 (SIZE 1/4, 3/8, 1 & OVER)
29	INSERT	A276 TYPE 316 or A351 Gr. CF8MB
30	BALL SEAT	HYPATITE® PTFE
34	NUT	A194 Gr. 8 (SIZE 1/2 & OVER)
47	THRUST WASHER	C/F PTFE
A	LATCH LOCK	A276 TYPE 430 (SIZE 1/2 & OVER)

NOTE

(1) Plastic covering.

(2) Valve rating 2000WOG (Size 1/4 to 1), 1500WOG (Size 1 1/4 to 2)

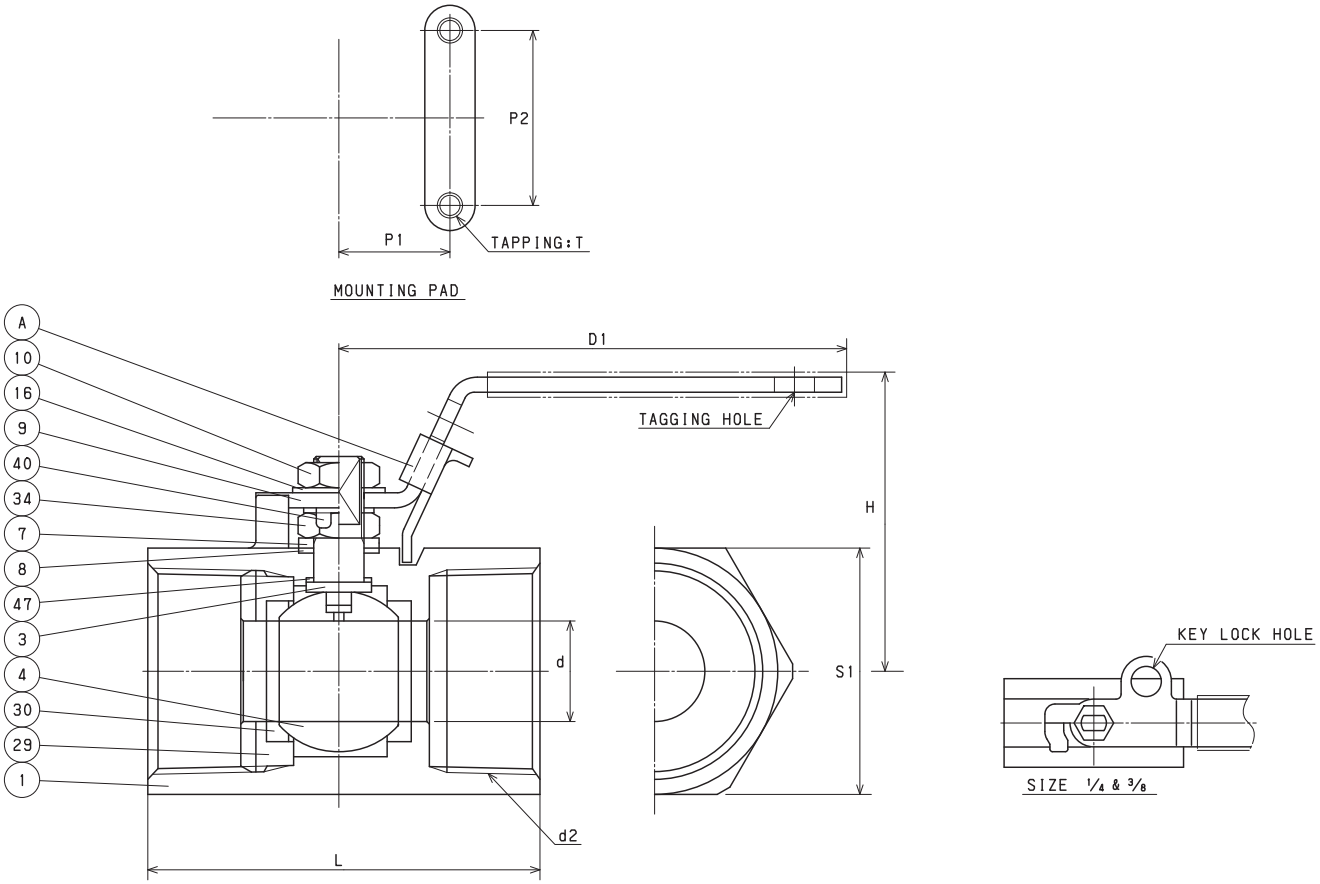

DIMENSIONS

Unit : inch

Nominal Size	d	H	D1	L	d2	S1	P1	P2	T
1/4	0.18	1.12	2.80	1.97	NPT 1/4	0.72	—	—	—
3/8	0.27	1.16	3.23	2.05	NPT 3/8	0.87	—	—	—
1/2	0.36	1.93	3.54	2.56	NPT 1/2	1.10	0.50	1.12	No.10-24UNC
3/4	0.49	2.05	3.54	2.76	NPT 3/4	1.34	0.57	1.37	No.10-24UNC
1	0.63	2.15	4.33	3.15	NPT 1	1.57	0.87	1.37	No.10-24UNC
1 1/4	0.79	2.34	4.33	3.74	NPT 1 1/4	1.97	1.00	1.50	1/4-20UNC
1 1/2	0.96	2.68	5.51	3.94	NPT 1 1/2	2.24	1.00	1.50	1/4-20UNC
2	1.26	2.89	5.51	4.49	NPT 2	2.72	1.00	1.50	1/4-20UNC

AKSCTKZM-FSO
CODE NO. 119-LOH

KITZ

MATERIAL LIST

No.	Name of Parts	Materials
1	BODY	A216 Gr. WCB
3	STEM	A276 TYPE 316
4	BALL	A276 TYPE 316
7	GLAND	A276 TYPE 304
8	GLAND PACKING	FLEXIBLE GRAPHITE
9	HANDLE	CARBON STEEL (1)
10	NUT	A194 Gr. 8
16	WASHER	A276 TYPE 304 (SIZE 1/4, 3/8, 1 & OVER)
29	INSERT	A276 TYPE 316 or A351 Gr. CF8M
30	BALL SEAT	HYPATITE® PTFE
34	NUT	A194 Gr. 8 (SIZE 1/2 & OVER)
47	THRUST WASHER	C/F PTFE
A	LATCH LOCK	A276 TYPE 430 (SIZE 1/2 & OVER)

NOTE

(1) Plastic covering.

(2) Valve rating 2000WOG (size 1/4 to 1), 1500WOG (size 1 1/4 to 2)

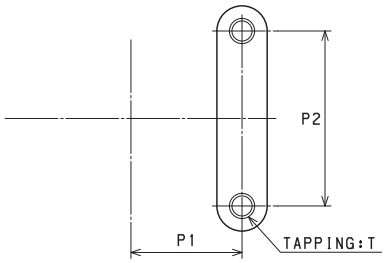

MOUNTING PAD

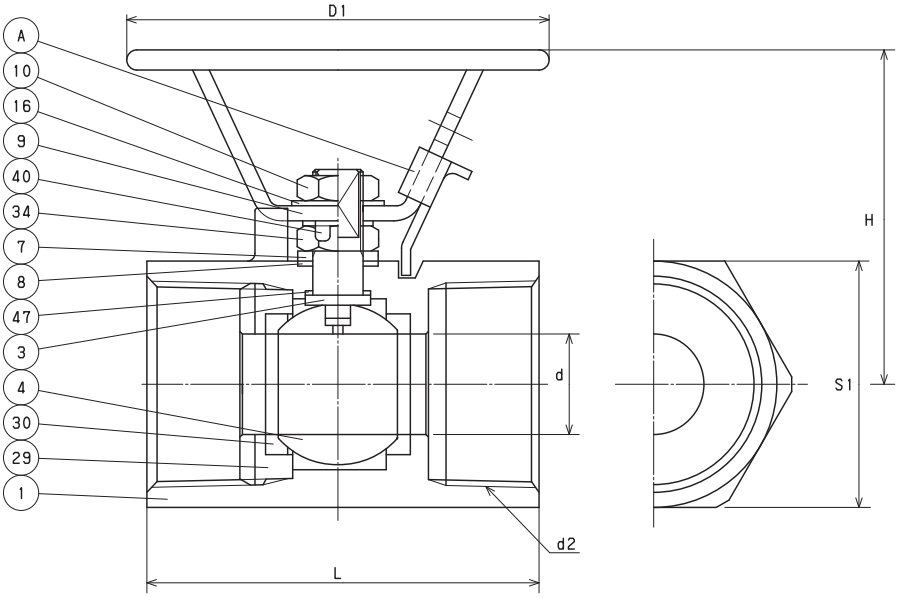

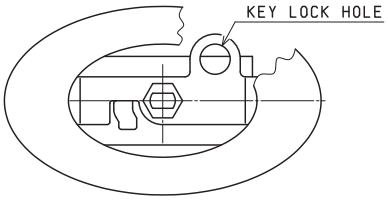

SIZE 1/4 & 3/8

DIMENSIONS

Unit : inch

Nominal Size	d	H	D1	L	d2	S1	P1	P2	T
1/4	0.18	1.71	3.94	1.97	NPT 1/4	0.72	—	—	—
3/8	0.27	1.87	3.94	2.05	NPT 3/8	0.87	—	—	—
1/2	0.36	2.13	3.94	2.56	NPT 1/2	1.10	0.50	1.12	No.10-24UNC
3/4	0.49	2.24	3.94	2.76	NPT 3/4	1.34	0.57	1.37	No.10-24UNC
1	0.63	2.38	3.94	3.15	NPT 1	1.57	0.87	1.37	No.10-24UNC
1 1/4	0.79	2.58	3.94	3.74	NPT 1 1/4	1.97	1.00	1.50	1/4-20UNC
1 1/2	0.96	3.07	5.12	3.94	NPT 1 1/2	2.24	1.00	1.50	1/4-20UNC
2	1.26	3.29	5.12	4.49	NPT 2	2.72	1.00	1.50	1/4-20UNC

AKSCTHZM
CODE NO. 217

KITZ

MATERIAL LIST

No.	Name of Parts	Materials
1	BODY	A216 Gr. WCB
2	BODY CAP	A216 Gr. WCB
3	STEM	A276 TYPE 316
4	BALL	A276 TYPE 316
7	GLAND	A276 TYPE 304
8	GLAND PACKING	PTFE
9	HANDLE	CARBON STEEL (1)
10	HANDLE NUT	A194 Gr. 8
16	WASHER	A276 TYPE 304
19	GASKET	PTFE
30	BALL SEAT	HYPATITE® PTFE
47	THRUST WASHER	G/F PTFE
A	LATCH LOCK	CARBON STEEL

NOTE

(1) Plastic covering.
(2) BS 5351 Class 800 (size 1/4 to 1), KITZ standard (size 1 1/4 to 2).
(3) Valve rating 2000WOG (size 1/4 to 1), 1500WOG (size 1 1/4 to 2).

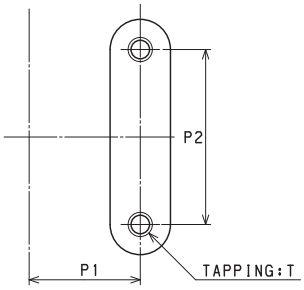

MOUNTING PAD

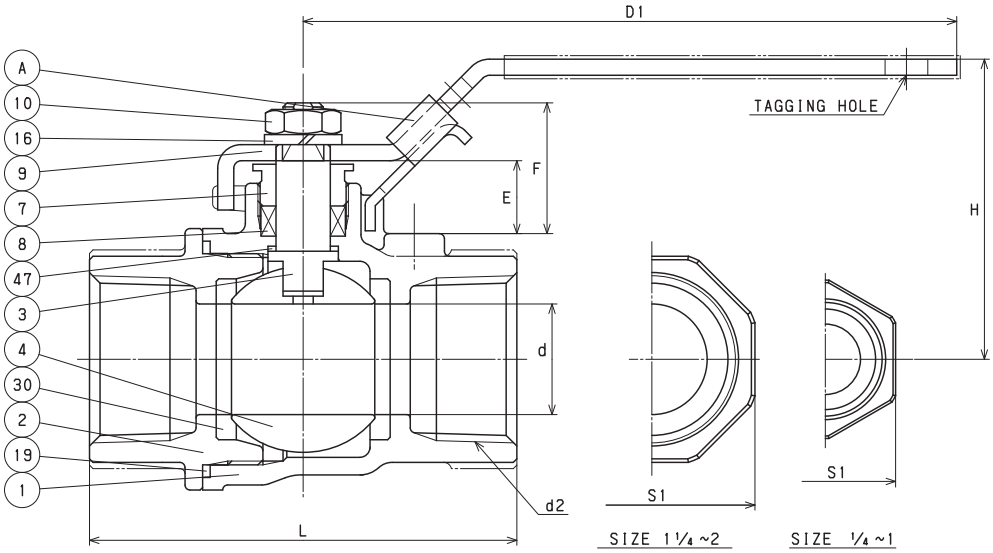

SIZE 1 1/4 ~2

SIZE 1/4 ~1

DIMENSIONS

Unit : inch

Nominal Size	d	H	D1	L	d2	S1	P1	P2	E	F	T
1/4	0.37	1.99	3.94	2.09	NPT 1/4	0.83	0.50	1.12	0.57	0.93	No.10-24UNC
3/8	0.37	1.99	3.94	2.09	NPT 3/8	0.95	0.50	1.12	0.57	0.93	No.10-24UNC
1/2	0.39	2.29	4.53	2.44	NPT 1/2	1.10	0.50	1.12	0.53	0.93	No.10-24UNC
3/4	0.59	2.47	4.53	2.83	NPT 3/4	1.38	0.87	1.37	0.55	1.00	No.10-24UNC
1	0.79	2.50	5.31	3.35	NPT 1	1.62	0.87	1.37	0.57	1.06	No.10-24UNC
1 1/4	0.98	2.66	5.31	3.70	NPT 1 1/4	2.05	0.93	1.05	0.53	1.02	1/4-20UNC
1 1/2	1.26	3.27	6.10	4.21	NPT 1 1/2	2.32	0.93	1.50	0.67	1.24	1/4-20UNC
2	1.57	3.58	7.48	4.72	NPT 2	2.84	0.93	1.50	0.59	1.24	1/4-20UNC

AKSCTHZM-O
CODE NO. 217-LOH

KITZ

MATERIAL LIST

No.	Name of Parts	Materials
1	BODY	A216 Gr. WCB
2	BODY CAP	A216 Gr. WCB
3	STEM	A276 TYPE 316
4	BALL	A276 TYPE 316
7	GLAND	A276 TYPE 304
8	GLAND PACKING	PTFE
9	HANDLE	CARBON STEEL (1)
10	HANDLE NUT	A194 Gr. 8
16	WASHER	A276 TYPE 304
19	GASKET	PTFE
30	BALL SEAT	HYPATITE® PTFE
47	THRUST WASHER	G/F PTFE
A	LATCH LOCK	CARBON STEEL

NOTE

(1) Plastic covering.

(2) BS 5351 Class 800 (size 1/4 to 1), KITZ standard (size 1 1/4 to 2).

(3) Valve rating 2000WOG (size 1/4 to 1), 1500WOG (size 1 1/4 to 2).

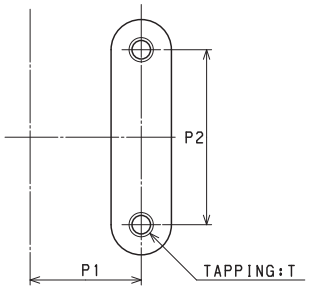

MOUNTING PAD

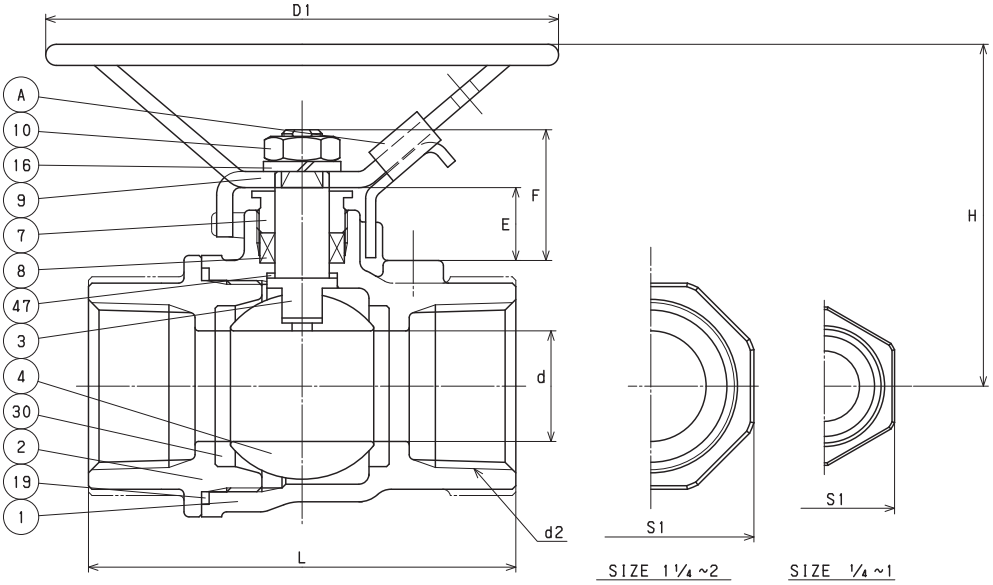

SIZE 1 1/4 ~2

SIZE 1/4 ~1

DIMENSIONS

Unit : inch

Nominal Size	d	H	D1	L	d2	S1	P1	P2	E	F	T
1/4	0.37	2.42	3.94	2.09	NPT 1/4	0.83	0.50	1.12	0.57	0.93	No.10-24UNC
3/8	0.37	2.42	3.94	2.09	NPT 3/8	0.95	0.50	1.12	0.57	0.93	No.10-24UNC
1/2	0.39	2.46	3.94	2.44	NPT 1/2	1.10	0.50	1.12	0.53	0.93	No.10-24UNC
3/4	0.59	2.64	3.94	2.83	NPT 3/4	1.38	0.87	1.37	0.55	1.00	No.10-24UNC
1	0.79	2.70	3.94	3.35	NPT 1	1.62	0.87	1.37	0.57	1.06	No.10-24UNC
1 1/4	0.98	2.85	3.94	3.70	NPT 1 1/4	2.05	0.93	1.50	0.53	1.02	1/4-20UNC
1 1/2	1.26	3.66	5.12	4.21	NPT 1 1/2	2.32	0.93	1.50	0.67	1.24	1/4-20UNC
2	1.57	3.98	7.09	4.72	NPT 2	2.84	0.93	1.50	0.59	1.24	1/4-20UNC

AKSCTHZM-FS
CODE NO. 219

KITZ

MATERIAL LIST

No.	Name of Parts	Materials
1	BODY	A216 Gr. WCB
2	BODY CAP	A216 Gr. WCB
3	STEM	A276 TYPE 316
4	BALL	A276 TYPE 316
7	GLAND	A276 TYPE 304
8	GLAND PACKING	FLEXIBLE GRAPHITE
9	HANDLE	CARBON STEEL (1)
10	HANDLE NUT	A194 Gr. 8
16	WASHER	A276 TYPE 304
19	GASKET	FLEXIBLE GRAPHITE
30	BALL SEAT	HYPATITE® PTFE
47	THRUST WASHER	G/F PTFE
A	LATCH LOCK	CARBON STEEL

NOTE

(1) Plastic covering.

(2) BS 5351 Class 800 (size 1/4 to 1), KITZ standard (size 1 1/4 to 2).

(3) Valve rating 2000WOG (size 1/4 to 1), 1500WOG (size 1 1/4 to 2).

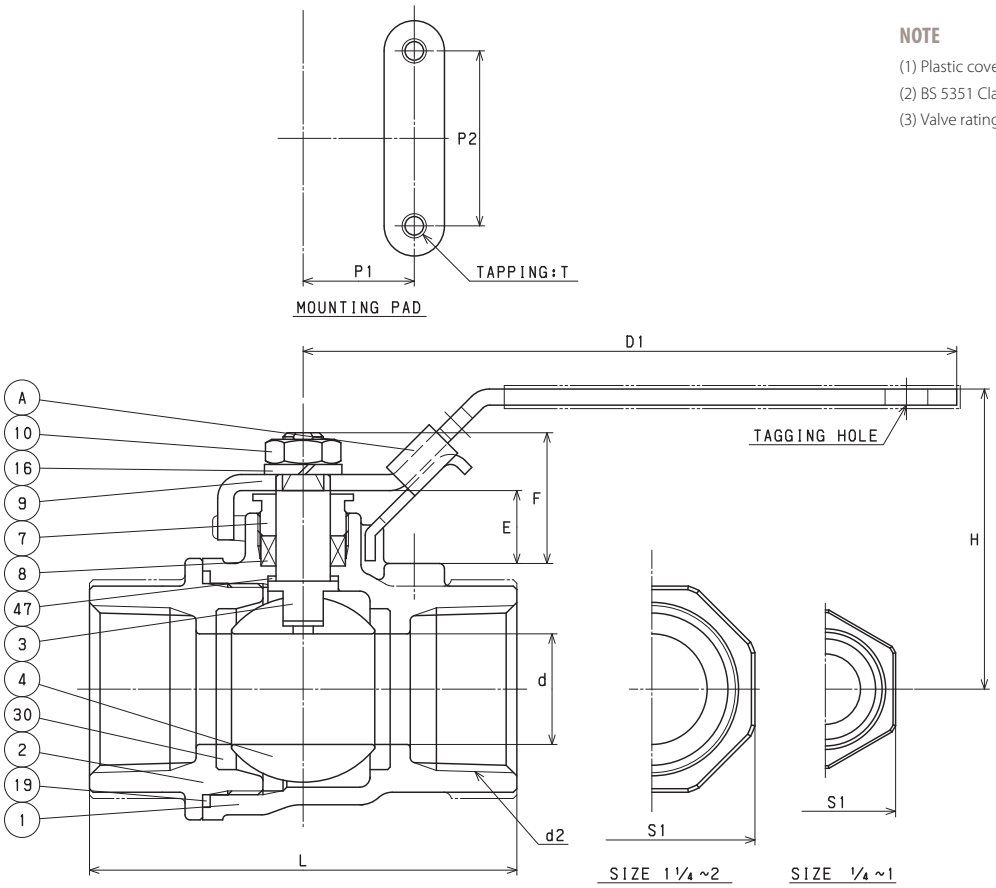

DIMENSIONS

Unit : inch

Nominal Size	d	H	D1	L	d2	S1	P1	P2	E	F	T
1/4	0.37	1.99	3.94	2.09	NPT 1/4	0.83	0.50	1.12	0.57	0.93	No.10-24UNC
3/8	0.37	1.99	3.94	2.09	NPT 3/8	0.95	0.50	1.12	0.57	0.93	No.10-24UNC
1/2	0.39	2.29	4.53	2.44	NPT 1/2	1.10	0.50	1.12	0.53	0.93	No.10-24UNC
3/4	0.59	2.47	4.53	2.83	NPT 3/4	1.38	0.87	1.37	0.55	1.00	No.10-24UNC
1	0.79	2.50	5.31	3.35	NPT 1	1.62	0.87	1.37	0.57	1.06	No.10-24UNC
1 1/4	0.98	2.66	5.31	3.70	NPT 1 1/4	2.05	0.93	1.50	0.53	1.02	1/4-20UNC
1 1/2	1.26	3.27	6.10	4.21	NPT 1 1/2	2.32	0.93	1.50	0.67	1.24	1/4-20UNC
2	1.57	3.58	7.48	4.72	NPT 2	2.84	0.93	1.50	0.59	1.24	1/4-20UNC

AKSCTHZM-FSO
CODE NO. 219-LOH

KITZ

MATERIAL LIST

No.	Name of Parts	Materials
1	BODY	A216 Gr. WCB
2	BODY CAP	A216 Gr. WCB
3	STEM	A276 TYPE 316
4	BALL	A276 TYPE 316
7	GLAND	A276 TYPE 304
8	GLAND PACKING	FLEXIBLE GRAPHITE
9	HANDLE	CARBON STEEL (1)
10	HANDLE NUT	A194 Gr. 8
16	WASHER	A276 TYPE 304
19	GASKET	FLEXIBLE GRAPHITE
30	BALL SEAT	HYPATITE® PTFE
47	THRUST WASHER	G/F PTFE
A	LATCH LOCK	CARBON STEEL

NOTE

(1) Plastic covering.

(2) BS 5351 Class 800 (size 1/4 to 1), KITZ standard (size 1 1/4 to 2).

(3) Valve rating 2000WOG (size 1/4 to 1), 1500WOG (size 1 1/4 to 2).

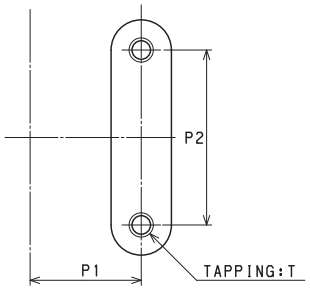

MOUNTING PAD

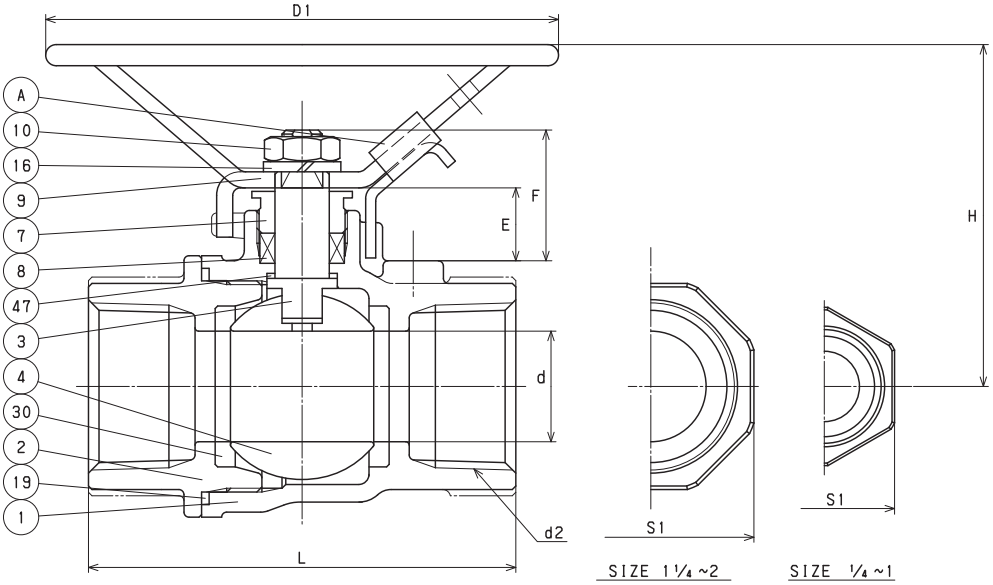

SIZE 1 1/4 ~2

SIZE 1/4 ~1

DIMENSIONS

Unit : inch

Nominal Size	d	H	D1	L	d2	S1	P1	P2	E	F	T
1/4	0.37	2.42	3.94	2.09	NPT 1/4	0.83	0.50	1.12	0.57	0.93	No.10-24UNC
3/8	0.37	2.42	3.94	2.09	NPT 3/8	0.95	0.50	1.12	0.57	0.93	No.10-24UNC
1/2	0.39	2.46	3.94	2.44	NPT 1/2	1.10	0.50	1.12	0.53	0.93	No.10-24UNC
3/4	0.59	2.64	3.94	2.83	NPT 3/4	1.38	0.87	1.37	0.55	1.00	No.10-24UNC
1	0.79	2.70	3.94	3.35	NPT 1	1.61	0.87	1.37	0.57	1.06	No.10-24UNC
1 1/4	0.98	2.85	3.94	3.70	NPT 1 1/4	2.05	0.93	1.50	0.53	1.02	1/4-20UNC
1 1/2	1.26	3.66	5.12	4.21	NPT 1 1/2	2.32	0.93	1.50	0.67	1.24	1/4-20UNC
2	1.57	3.98	7.09	4.72	NPT 2	2.84	0.93	1.50	0.59	1.24	1/4-20UNC

AKSCTHWZM
CODE NO. 237

KITZ

MATERIAL LIST

No.	Name of Parts	Materials
1	BODY	A216 Gr. WCB
2	BODY CAP	A216 Gr. WCB
3	STEM	A276 TYPE 316
4	BALL	A276 TYPE 316
7	GLAND	A276 TYPE 304
8	GLAND PACKING	PTFE
9	HANDLE	CARBON STEEL (1)
10	HANDLE NUT	A194 Gr. 8
16	WASHER	A276 TYPE 304 (SIZE 1/2 & OVER)
30	BALL SEAT	HYPATITE® PTFE
47	THRUST WASHER	G/F PTFE
A	LATCH LOCK	A276 TYPE 304

NOTE

(1) Plastic covering.
(2) BS 5351 Class 800 (size 1/4 to 1), KITZ standard (size 1 1/4 to 2).
(3) Valve rating 2000WOG (size 1/4 to 1), 1500WOG (size 1 1/4 to 2).

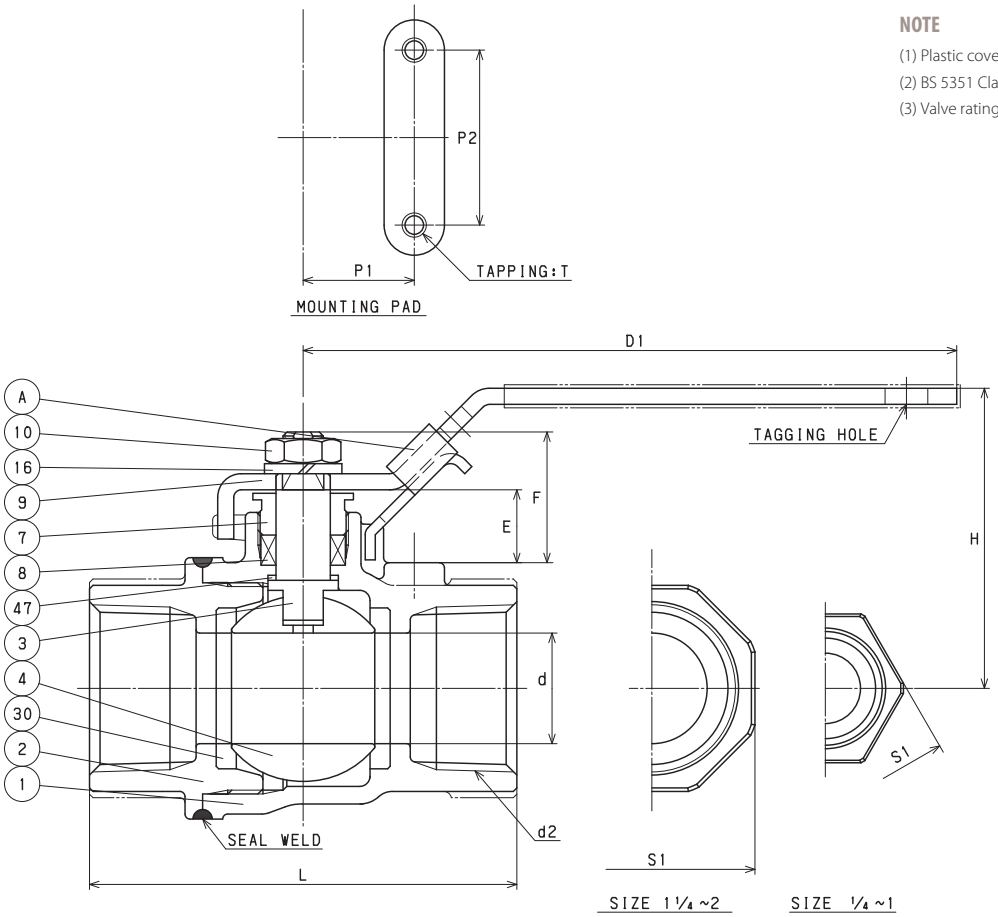

DIMENSIONS

Unit : inch

Nominal Size	d	H	D1	L	d2	S1	P1	P2	E	F	T
1/4	0.38	1.97	3.94	2.08	NPT 1/4	0.82	0.50	1.12	0.39	0.73	No.10-24UNC
3/8	0.46	1.97	3.94	2.08	NPT 3/8	0.94	0.50	1.12	0.43	0.76	No.10-24UNC
1/2	0.50	2.30	4.53	2.40	NPT 1/2	1.14	0.50	1.12	0.52	0.96	No.10-24UNC
3/4	0.59	2.42	4.53	2.71	NPT 3/4	1.38	0.87	1.37	0.50	0.93	No.10-24UNC
1	0.78	2.49	5.31	3.25	NPT 1	1.69	0.87	1.37	0.62	1.19	No.10-24UNC
1 1/4	1.00	2.65	5.31	3.54	NPT 1 1/4	2.09	0.93	1.50	0.61	1.19	1/4-20UNC
1 1/2	1.26	3.40	6.10	4.13	NPT 1 1/2	2.32	0.93	1.50	0.86	1.45	1/4-20UNC
2	1.50	3.64	7.48	4.61	NPT 2	2.83	0.93	1.50	0.83	1.42	1/4-20UNC

AKSCTHWZM-O
CODE NO. 237-LOH

KITZ

MATERIAL LIST

No.	Name of Parts	Materials
1	BODY	A216 Gr. WCB
2	BODY CAP	A216 Gr. WCB
3	STEM	A276 TYPE 316
4	BALL	A276 TYPE 316
7	GLAND	A276 TYPE 304
8	GLAND PACKING	PTFE
9	HANDLE	CARBON STEEL (1)
10	HANDLE NUT	A194 Gr. 8
16	WASHER	A276 TYPE 304 (SIZE 1/2 & OVER)
30	BALL SEAT	HYPATITE® PTFE
47	THRUST WASHER	G/F PTFE
A	LATCH LOCK	A276 TYPE 304

NOTE

(1) Plastic covering.

(2) BS 5351 Class 800 (size 1/4 to 1), KITZ standard (size 1 1/4 to 2).

(3) Valve rating 2000WOG (size 1/4 to 1), 1500WOG (size 1 1/4 to 2).

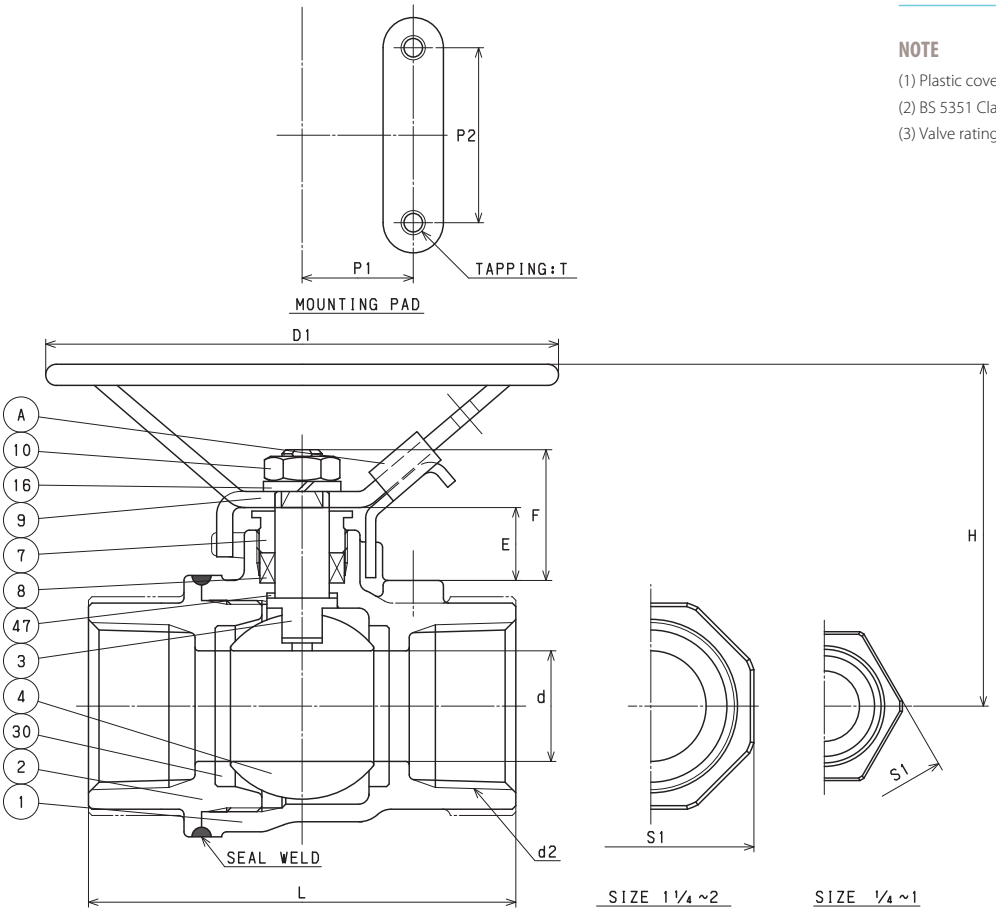

DIMENSIONS

Unit : inch

Nominal Size	d	H	D1	L	d2	S1	P1	P2	E	F	T
1/4	0.38	2.24	3.94	2.08	NPT 1/4	0.82	0.50	1.12	0.39	0.73	No.10-24UNC
3/8	0.46	2.24	3.94	2.08	NPT 3/8	0.94	0.50	1.12	0.43	0.76	No.10-24UNC
1/2	0.50	2.45	3.94	2.40	NPT 1/2	1.14	0.50	1.12	0.52	0.96	No.10-24UNC
3/4	0.59	2.51	3.94	2.71	NPT 3/4	1.38	0.87	1.37	0.50	0.93	No.10-24UNC
1	0.78	2.63	3.94	3.25	NPT 1	1.69	0.87	1.37	0.62	1.19	No.10-24UNC
1 1/4	1.00	2.81	3.94	3.54	NPT 1 1/4	2.09	0.93	1.50	0.61	1.19	1/4-20UNC
1 1/2	1.26	3.81	5.12	4.13	NPT 1 1/2	2.32	0.93	1.50	0.86	1.45	1/4-20UNC
2	1.50	4.03	5.12	4.61	NPT 2	2.83	0.93	1.50	0.83	1.42	1/4-20UNC

AKSCTHWZM-FS
CODE NO. 239

KITZ

MATERIAL LIST

No.	Name of Parts	Materials
1	BODY	A216 Gr. WCB
2	BODY CAP	A216 Gr. WCB
3	STEM	A276 TYPE 316
4	BALL	A276 TYPE 316
7	GLAND	A276 TYPE 304
8	GLAND PACKING	FLEXIBLE GRAPHITE
9	HANDLE	CARBON STEEL (1)
10	HANDLE NUT	A194 Gr. 8
16	WASHER	A276 TYPE 304 (SIZE 1/2 & OVER)
30	BALL SEAT	HYPATITE® PTFE
47	THRUST WASHER	G/F PTFE
A	LATCH LOCK	A276 TYPE 304

NOTE

(1) Plastic covering.

(2) BS 5351 Class 800 (size 1/4 to 1), KITZ standard (size 1 1/4 to 2).

(3) Valve rating 2000WOG (size 1/4 to 1), 1500WOG (size 1 1/4 to 2).

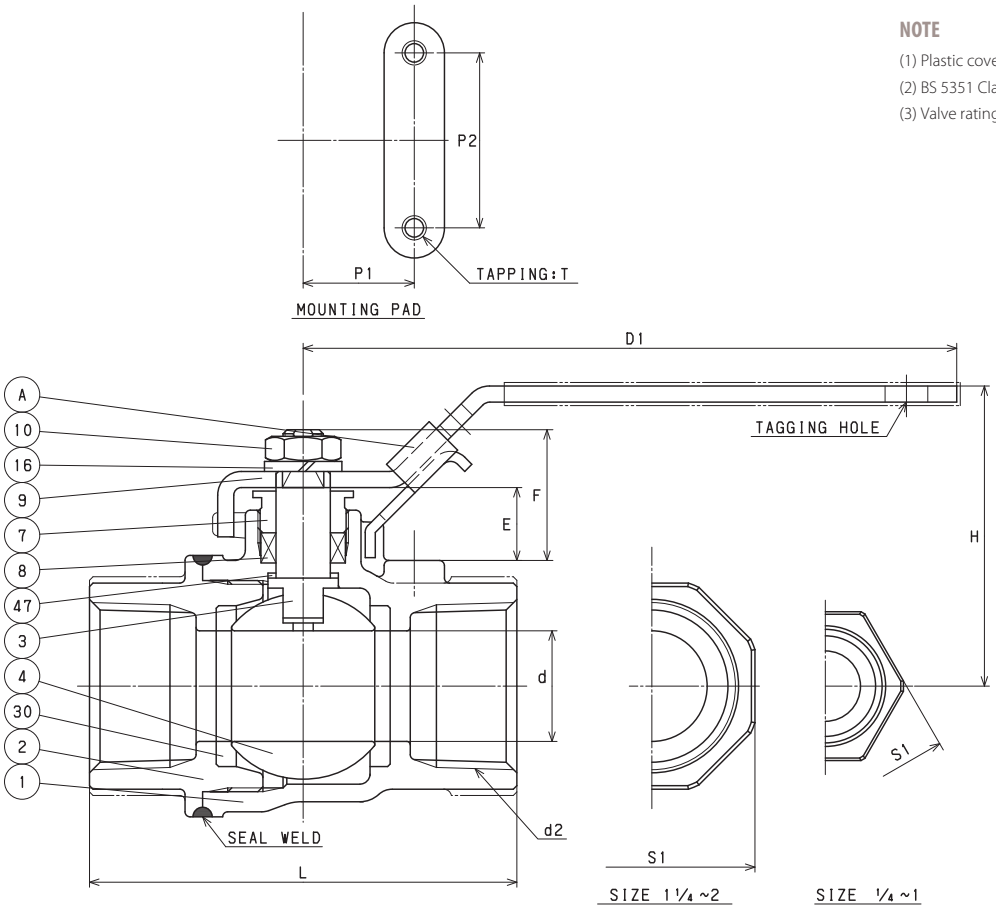

DIMENSIONS

Unit : inch

Nominal Size	d	H	D1	L	d2	S1	P1	P2	E	F	T
1/4	0.38	1.97	3.94	2.08	NPT 1/4	0.82	0.50	1.12	0.39	0.73	No.10-24UNC
3/8	0.46	1.97	3.94	2.08	NPT 3/8	0.94	0.50	1.12	0.43	0.76	No.10-24UNC
1/2	0.50	2.30	4.53	2.40	NPT 1/2	1.14	0.50	1.12	0.52	0.96	No.10-24UNC
3/4	0.59	2.42	4.53	2.71	NPT 3/4	1.38	0.87	1.37	0.50	0.93	No.10-24UNC
1	0.78	2.49	5.31	3.25	NPT 1	1.69	0.87	1.37	0.62	1.19	No.10-24UNC
1 1/4	1.00	2.65	5.31	3.54	NPT 1 1/4	2.09	0.93	1.50	0.61	1.19	1/4-20UNC
1 1/2	1.26	3.40	6.14	4.13	NPT 1 1/2	2.32	0.93	1.50	0.89	1.45	1/4-20UNC
2	1.50	3.64	7.48	4.61	NPT 2	2.83	0.93	1.50	0.83	1.42	1/4-20UNC

AKSCTHWZM-FSO
CODE NO. 239-LOH

KITZ

MATERIAL LIST

No.	Name of Parts	Materials
1	BODY	A216 Gr. WCB
2	BODY CAP	A216 Gr. WCB
3	STEM	A276 TYPE 316
4	BALL	A276 TYPE 316
7	GLAND	A276 TYPE 304
8	GLAND PACKING	FLEXIBLE GRAPHITE
9	HANDLE	CARBON STEEL (1)
10	HANDLE NUT	A194 Gr. 8
16	WASHER	A276 TYPE 304 (SIZE 1/2 & OVER)
30	BALL SEAT	HYPATITE® PTFE
47	THRUST WASHER	G/F PTFE
A	LATCH LOCK	A276 TYPE 304

NOTE

(1) Plastic covering.

(2) BS 5351 Class 800 (size 1/4 to 1), KITZ standard (size 1 1/4 to 2).

(3) Valve rating 2000WOG (size 1/4 to 1), 1500WOG (size 1 1/4 to 2).

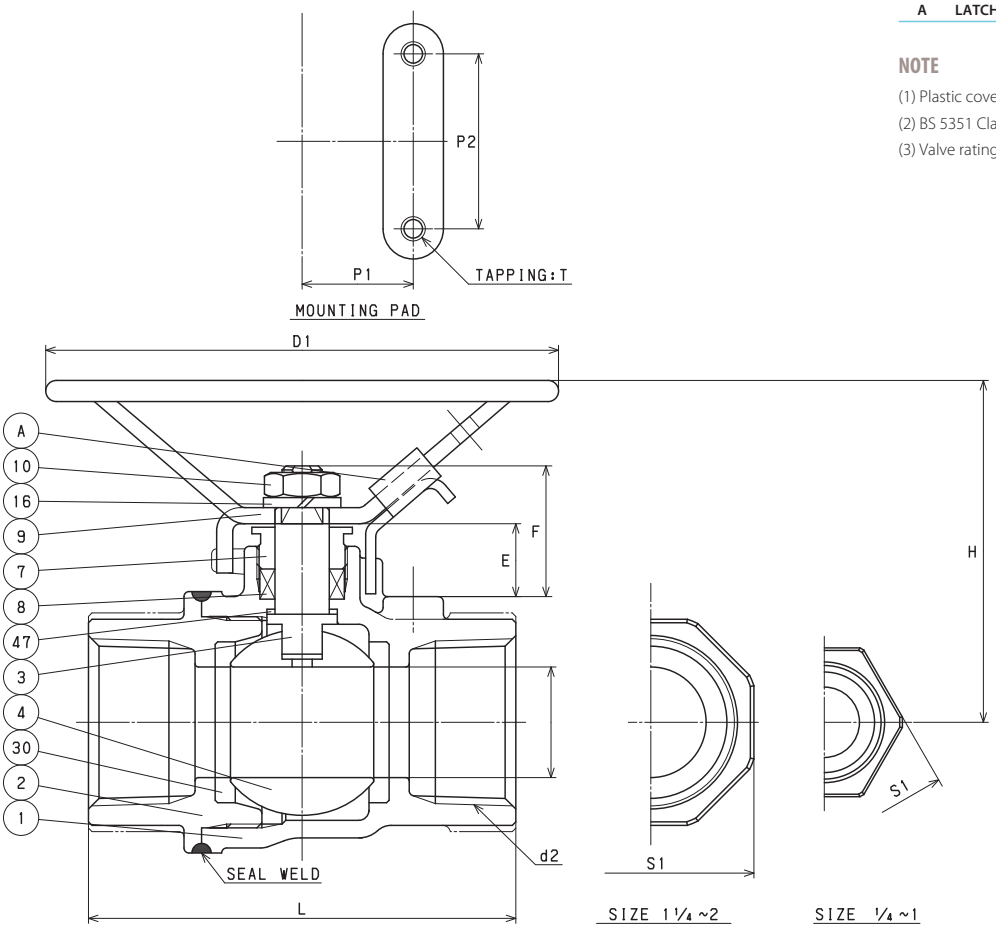

DIMENSIONS

Unit : inch

Nominal Size	d	H	D1	L	d2	S1	P1	P2	E	F	T
1/4	0.38	2.24	3.94	2.08	NPT 1/4	0.82	0.50	1.12	0.39	0.73	No.10-24UNC
3/8	0.46	2.24	3.94	2.08	NPT 3/8	0.94	0.50	1.12	0.43	0.76	No.10-24UNC
1/2	0.50	2.45	3.94	2.40	NPT 1/2	1.14	0.50	1.12	0.52	0.96	No.10-24UNC
3/4	0.59	2.51	3.94	2.71	NPT 3/4	1.38	0.87	1.37	0.50	0.93	No.10-24UNC
1	0.78	2.63	3.94	3.25	NPT 1	1.69	0.87	1.37	0.62	1.19	No.10-24UNC
1 1/4	1.00	2.81	3.94	3.54	NPT 1 1/4	2.09	0.93	1.50	0.61	1.19	1/4-20UNC
1 1/2	1.26	3.81	5.12	4.13	NPT 1 1/2	2.32	0.93	1.50	0.86	1.45	1/4-20UNC
2	1.50	4.03	5.12	4.61	NPT 2	2.83	0.93	1.50	0.83	1.42	1/4-20UNC

AKSCTKM
CODE NO. 50

KITZ

MATERIAL LIST

No.	Name of Parts	Materials
1	BODY	A216 Gr. WCB (1)
3	STEM	A276 TYPE 316
4	BALL	A276 TYPE 316
7	GLAND	A276 TYPE 316
8	GLAND PACKING	G/F PTFE
9	HANDLE	A276 TYPE 430 (2)
10	SELF LOCKING NUT	A194 Gr. 8
16	SPRING WASHER	CARBON STEEL
29	INSERT	A276 TYPE 316 or A351 Gr. CF8M
30	BALL SEAT	G/F PTFE
43	SPRING	A167 TYPE 304
47	THRUST WASHER	REINFORCED PTFE

NOTE

(1) Phosphating.

(2) Plastic covering.

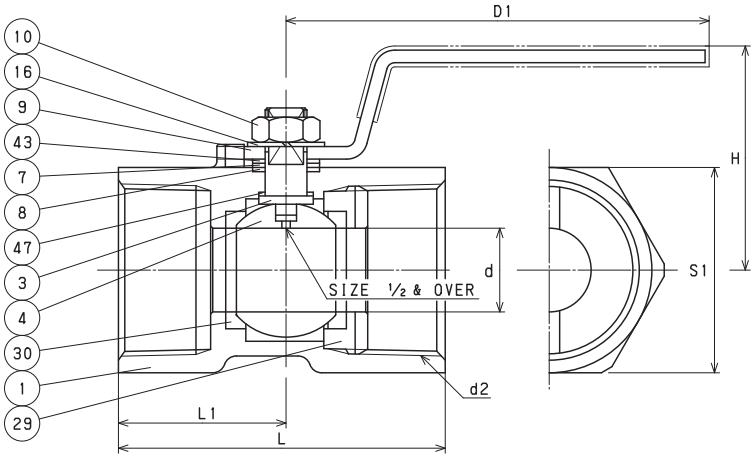

DIMENSIONS

Unit : inch

Nominal Size	d	H	D1	L	d2	S1	L1
1/4	0.18	1.22	2.36	1.54	NPT 1/4	0.67	0.75
3/8	0.27	1.42	2.76	1.73	NPT 3/8	0.83	0.83
1/2	0.36	1.61	3.35	2.22	NPT 1/2	0.99	1.08
3/4	0.49	1.73	3.35	2.32	NPT 3/4	1.26	1.18
1	0.63	1.89	3.94	2.80	NPT 1	1.50	1.42
1 1/4	0.79	2.13	3.94	3.07	NPT 1 1/4	1.93	1.57
1 1/2	0.96	2.56	4.92	3.27	NPT 1 1/2	2.09	1.67
2	1.26	2.83	4.92	3.94	NPT 2	2.56	2.01

AKSC3TFZM
CODE NO. 317F

KITZ

MATERIAL LIST

No.	Name of Parts	Materials
1	BODY	A216 Gr. WCB
2	CAP	A216 Gr. WCB
3	STEM	A276 TYPE316
4	BALL	A276 TYPE316 or A351 Gr,CF8M
7	GLAND	A276 TYPE316
8	GLAND PACKING	PTFE
9	HANDLE	A276 TYPE430(1)
10	HANDLE NUT	STAINLESS STEEL
16 A	WASHER	STAINLESS STEEL
16 B	NAME PLATE	STAINLESS STEEL
19	GASKET	PTFE
30	BALL SEAT	HYPATITE® PTFE
34	GLAND NUT	STAINLESS STEEL
35	CAP BOLT	STAINLESS STEEL
40	LOCK PLATE	STAINLESS STEEL
43	CONED DISC SPTING	STAINLESS STEEL
47	THRUST WASHER	PTFE(2)
126	STOPPER PIN	A276 TYPE304
A	LATCH LOCK	STAINLESS STEEL

NOTE

(1) Plastic covering.

(2) Stem−to-body grounding optional available.

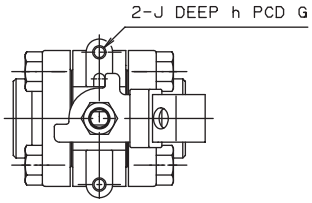

SIZE ¼ - ⅜

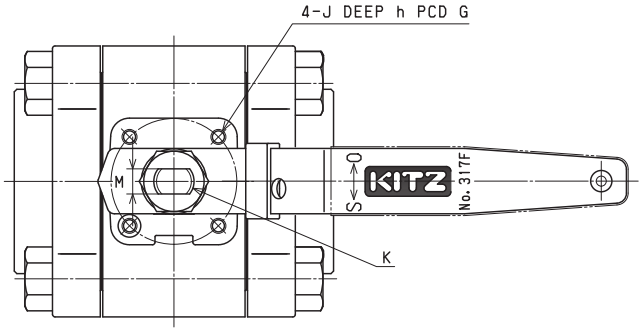

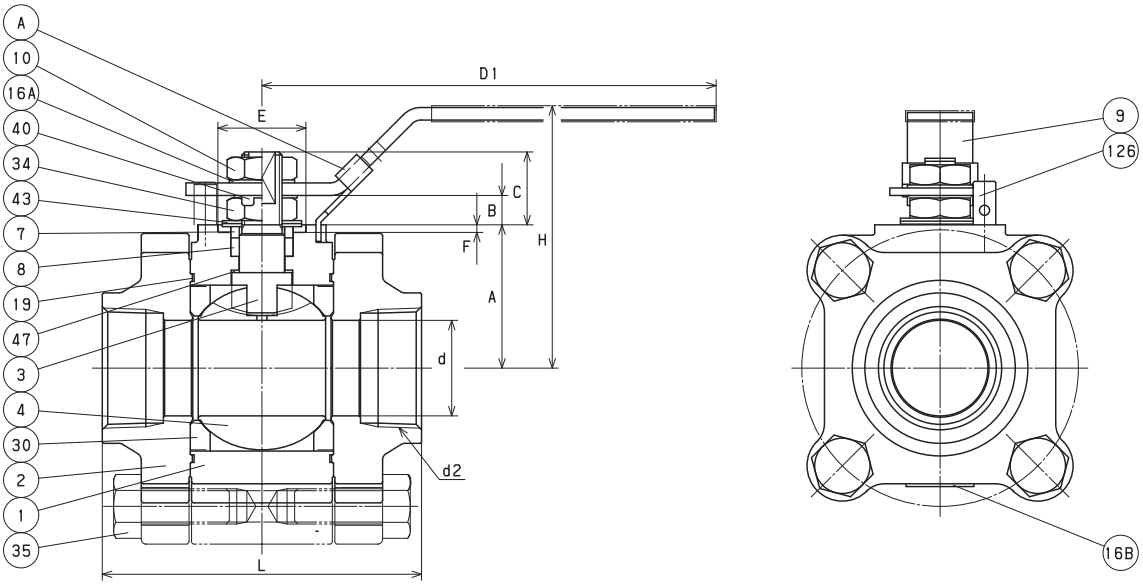

DIMENSIONS

Unit : inch

Nominal Size						Mounting Dimensions for Actuator										
in.	d	H	D1	L	d2	A	B	C	E	F	G	J	h	K	M	ISO 5211 Flange Type
1/4	0.39	1.89	4.72	2.48	NPT 1/4	1.04	0.08	0.41	—	—	1.97	1/4-20UNC	0.28	M8	0.20	—
3/8	0.39	1.89	4.72	2.48	NPT 3/8	1.04	0.08	0.41	—	—	1.97	1/4-20UNC	0.28	M8	0.20	—
1/2	0.55	2.36	5.12	2.80	NPT 1/2	1.38	0.17	0.56	0.98	0.12	1.42	1/4-20UNC	0.20	M10	0.24	F03
3/4	0.75	2.68	5.12	3.54	NPT 3/4	1.69	0.20	0.67	1.18	0.12	1.65	1/4-20UNC	0.24	M12	0.34	F04
1	0.94	3.23	5.91	4.06	NPT 1	1.73	0.53	1.15	1.18	0.12	1.65	1/4-20UNC	0.32	M14	0.39	F04
1 1/4	1.18	3.46	5.91	4.33	NPT 1 1/4	1.95	0.53	1.07	1.18	0.12	1.65	1/4-20UNC	0.32	M14	0.39	F04
1 1/2	1.50	4.09	7.09	5.00	NPT 1 1/2	2.24	0.46	1.14	1.38	0.12	1.97	1/4-20UNC	0.39	M16	0.39	F05

AKSC3TFZM
CODE NO. 317F

MATERIAL LIST

No.	Name of Parts	Materials
1	BODY	A216 Gr. WCB
2	CAP	A216 Gr. WCB
3	STEM	A276 TYPE 316
4	BALL	A351 Gr. CF8M
7	GLAND	A351 Gr. CF8
8	GLAND PACKING	PTFE
9	HANDLE	DUCTILE IRON
16	HANDLE PLATE	STAINLESS STEEL
19	GASKET	PTFE
30	BALL SEAT	HYPATITE® PTFE
35	CAP BOLT	A193 Gr. B8
36	GLAND BOLT	A193 Gr. B8
40	KEY LOCK PLATE	STAINLESS STEEL
47	THRUST WASHER	PTFE (1)
48	SNAP RING	STAINLESS STEEL
49	STOPPER	STAINLESS STEEL
123	HANDLE BOLT	STAINLESS STEEL
124	SPRING & PIN	A313 & A276 TYPE 316
126	STOPPER PIN	STAINLESS STEEL

NOTE

(1) Stem—to-body grounding optional available.

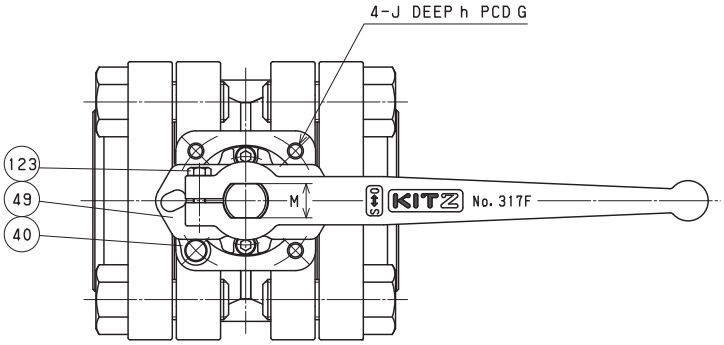

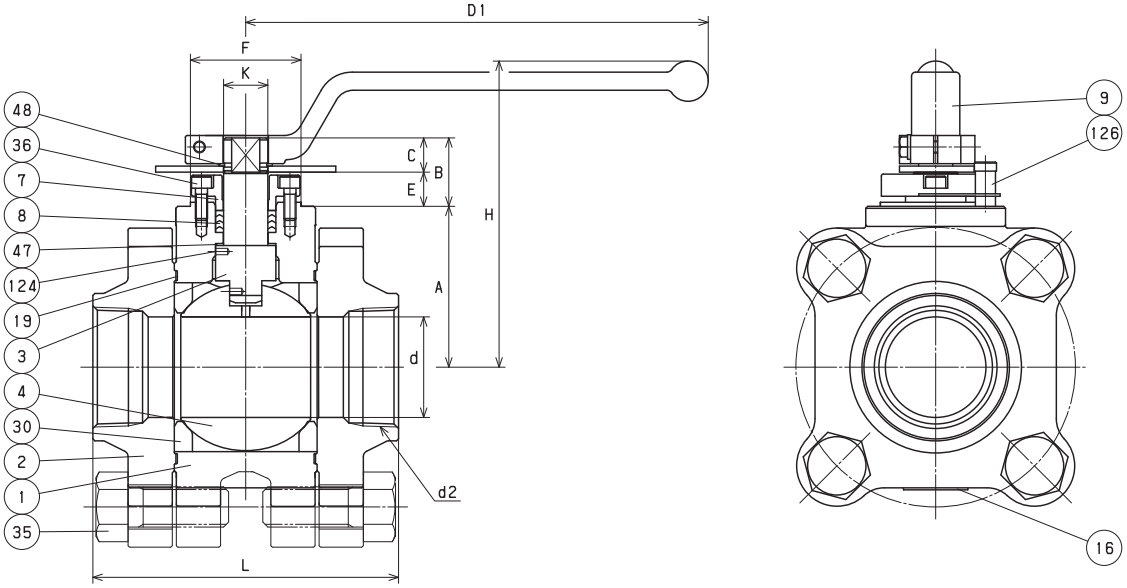

DIMENSIONS

Unit : inch

Nominal Size						Mounting Dimensions for Actuator										
in.	d	H	D1	L	d2	A	B	C	E	F	K	G	J	h	M	ISO 5211 Flange Type
2	1.97	5.98	9.06	5.98	NPT 2	3.15	1.34	0.67	0.67	2.17	0.87	2.76	5/16-18UNC	0.59	0.67	F07

AKSC3TFZM-O
CODE NO. 317F-LOH

MATERIAL LIST

No.	Name of Parts	Materials
1	BODY	A216 Gr. WCB
2	CAP	A216 Gr. WCB
3	STEM	A276 TYPE316
4	BALL	A276 TYPE316 or A351 Gr,CF8M
7	GLAND	A276 TYPE316
8	GLAND PACKING	PTFE
9	HANDLE	A276 TYPE430(1)
10	HANDLE NUT	STAINLESS STEEL
16 A	WASHER	STAINLESS STEEL
16 B	NAME PLATE	STAINLESS STEEL
19	GASKET	PTFE
30	BALL SEAT	HYPATITE® PTFE
34	GLAND NUT	STAINLESS STEEL
35	CAP BOLT	STAINLESS STEEL
40	LOCK PLATE	STAINLESS STEEL
43	CONED DISC SPTING	STAINLESS STEEL
47	THRUST WASHER	PTFE(2)
126	STOPPER PIN	A276 TYPE304
A	LATCH LOCK	STAINLESS STEEL

NOTE

(1) Plastic covering.

(2) Stem—to-body grounding optional available.

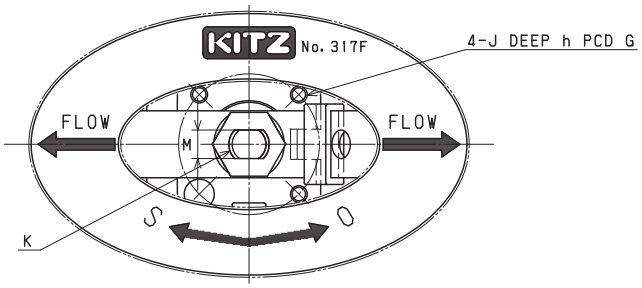

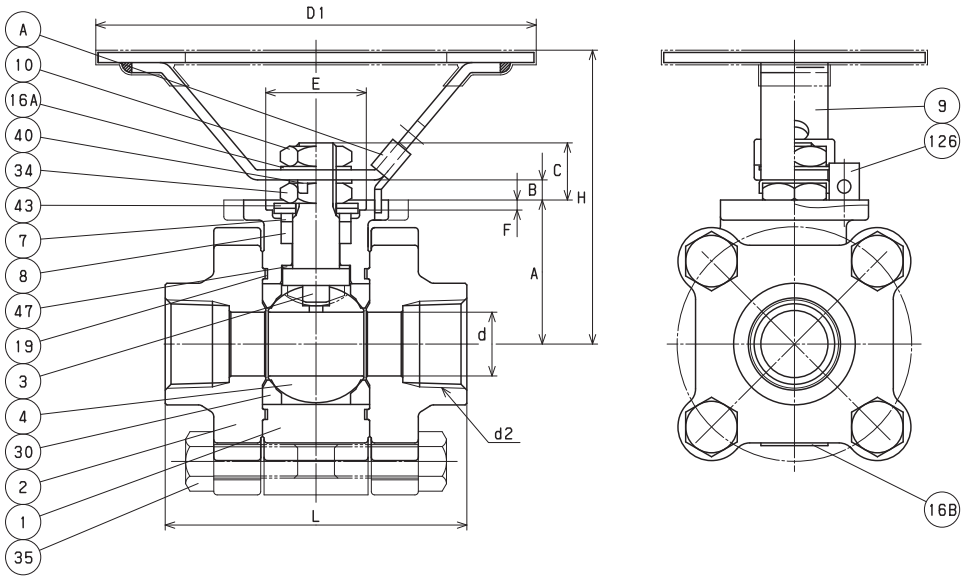

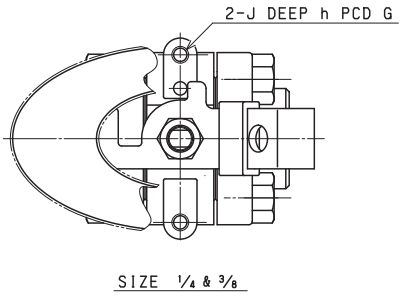

DIMENSIONS

Unit : inch

Nominal Size						Mounting Dimensions for Actuator										
in.	d	H	D1	L	d2	A	B	C	E	F	G	J	h	K	M	ISO 5211 Flange Type
1/4	0.39	2.48	3.94	2.48	NPT 1/4	1.04	0.08	0.41	—	—	1.97	1/4-20UNC	0.28	M8	0.20	—
3/8	0.39	2.48	3.94	2.48	NPT 3/8	1.04	0.08	0.41	—	—	1.97	1/4-20UNC	0.28	M8	0.20	—
1/2	0.55	3.07	5.12	2.80	NPT 1/2	1.38	0.17	0.56	0.98	0.12	1.42	1/4-20UNC	0.20	M10	0.24	F03
3/4	0.75	3.43	5.12	3.54	NPT 3/4	1.69	0.20	0.67	1.18	0.12	1.65	1/4-20UNC	0.24	M12	0.34	F04
1	0.94	3.35	7.09	4.06	NPT 1	1.73	0.53	1.15	1.18	0.12	1.65	1/4-20UNC	0.32	M14	0.39	F04
1 1/4	1.18	3.58	7.09	4.33	NPT 1 1/4	1.95	0.53	1.07	1.18	0.12	1.65	1/4-20UNC	0.32	M14	0.39	F04
1 1/2	1.50	3.94	7.09	5.00	NPT 1 1/2	2.24	0.46	1.14	1.38	0.12	1.97	1/4-20UNC	0.39	M16	0.39	F05

AKSC3THZM
CODE NO. 317

KITZ

MATERIAL LIST

No.	Name of Parts	Materials
1	BODY	A216 Gr. WCB
2	CAP	A216 Gr. WCB
3	STEM	A276 TYPE316
4	BALL	A276 TYPE316 or A351 Gr,CF8M
7	GLAND	A276 TYPE316
8	GLAND PACKING	PTFE
9	HANDLE	A276 TYPE430(1)
10	HANDLE NUT	STAINLESS STEEL
16A	WASHER	STAINLESS STEEL
16B	NAME PLATE	STAINLESS STEEL
19	GASKET	PTFE
30	BALL SEAT	HYPATITE® PTFE
34	GLAND NUT	STAINLESS STEEL
35	CAP BOLT	STAINLESS STEEL
40	LOCK PLATE	STAINLESS STEEL
43	CONED DISC SPTING	STAINLESS STEEL
47	THRUST WASHER	PTFE(2)
126	STOPPER PIN	A276 TYPE304
A	LATCH LOCK	STAINLESS STEEL

NOTE

(1) Plastic covering.

(2) Stem—to-body grounding optional available.

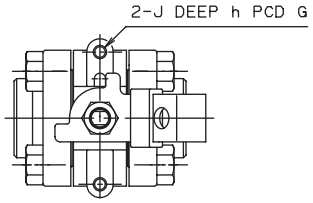

SIZE ½ ONLY

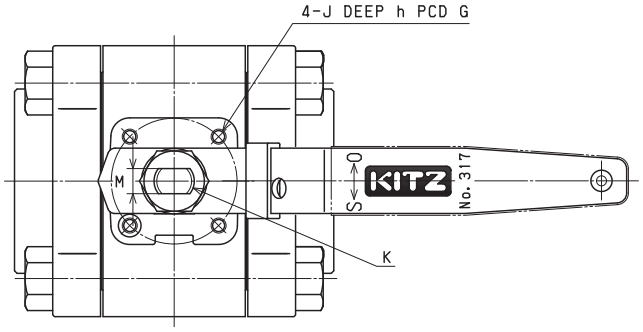

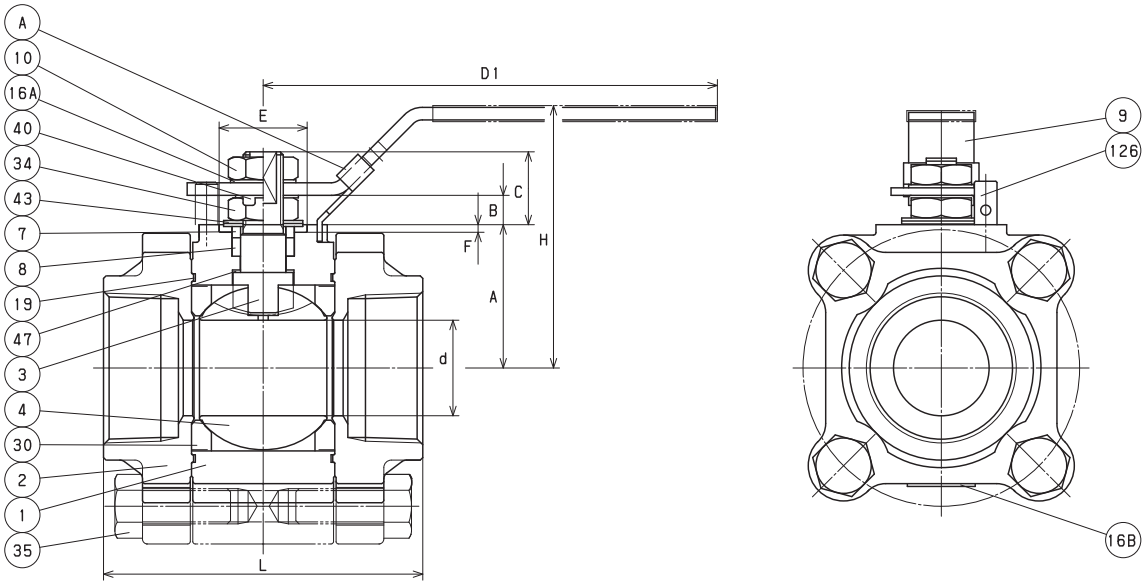

DIMENSIONS

Unit : inch

Nominal Size						Mounting Dimensions for Actuator										
in.	d	H	D1	L	d2	A	B	C	E	F	G	J	h	K	M	ISO 5211 Flange Type
1/2	0.39	1.89	4.72	2.48	NPT 1/2	1.04	0.08	0.41	—	—	1.97	1/4-20UNC	0.28	M8	0.20	—
3/4	0.55	2.36	5.12	2.80	NPT 3/4	1.38	0.17	0.56	0.98	0.12	1.42	1/4-20UNC	0.20	M10	0.24	F03
1	0.75	2.68	5.12	3.54	NPT 1	1.69	0.20	0.67	1.18	0.12	1.65	1/4-20UNC	0.24	M12	0.34	F04
1 1/4	0.94	3.23	5.91	4.06	NPT 1 1/4	1.73	0.53	1.15	1.18	0.12	1.65	1/4-20UNC	0.32	M14	0.39	F04
1 1/2	1.18	3.46	5.91	4.33	NPT 1 1/2	1.95	0.53	1.07	1.18	0.12	1.65	1/4-20UNC	0.33	M14	0.39	F04
2	1.50	4.09	7.09	5.00	NPT 2	2.24	0.46	1.14	1.38	0.12	1.97	1/4-20UNC	0.39	M16	0.39	F05

AKSC3THZM
CODE NO. 317

MATERIAL LIST

No.	Name of Parts	Materials
1	BODY	A216 Gr. WCB
2	CAP	A216 Gr. WCB
3	STEM	A276 TYPE 316
4	BALL	A351 Gr. CF8M
7	GLAND	A351 Gr. CF8
8	GLAND PACKING	PTFE
9	HANDLE	DUCTILE IRON
16	HANDLE PLATE	STAINLESS STEEL
19	GASKET	PTFE
30	BALL SEAT	HYPATITE® PTFE
35	CAP BOLT	A193 Gr. B8
36	GLAND BOLT	A193 Gr. B8
40	KEY LOCK PLATE	STAINLESS STEEL
47	THRUST WASHER	PTFE (1)
48	SNAP RING	STAINLESS STEEL
49	STOPPER	STAINLESS STEEL
123	HANDLE BOLT	STAINLESS STEEL
124	SPRING & PIN	A313 & A276 TYPE 316
126	STOPPER PIN	STAINLESS STEEL

NOTE

(1) Stem–to-body grounding optional available.

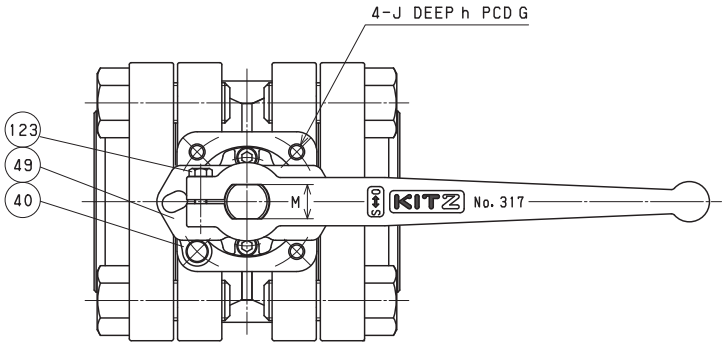

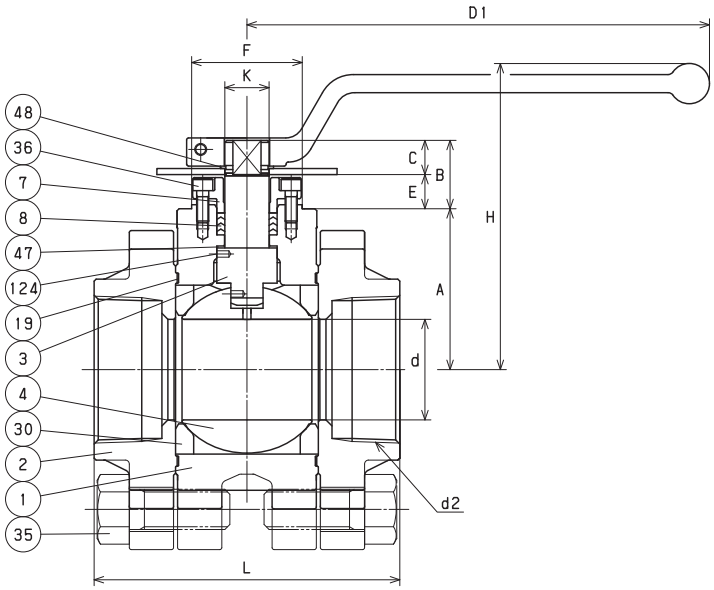

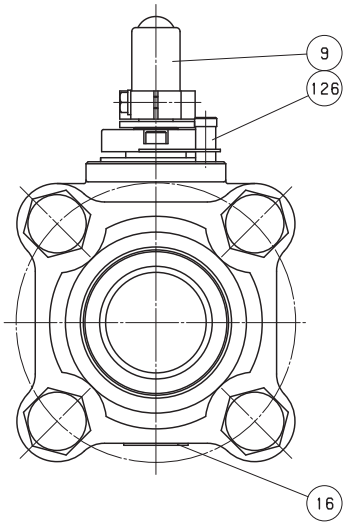

DIMENSIONS

Unit : inch

Nominal Size						Mounting Dimensions for Actuator										
in.	d	H	D1	L	d2	A	B	C	E	F	K	G	J	h	M	ISO 5211 Flange Type
2 1/2	1.97	5.98	9.06	5.98	NPT 2 1/2	3.15	1.34	0.67	0.67	2.17	0.87	2.76	5/16-18UNC	0.59	0.67	F07

AKSC3THZM-O
CODE NO. 317-LOH

MATERIAL LIST

No.	Name of Parts	Materials
1	BODY	A216 Gr. WCB
2	CAP	A216 Gr. WCB
3	STEM	A276 TYPE316
4	BALL	A276 TYPE316 or A351 Gr,CF8M
7	GLAND	A276 TYPE316
8	GLAND PACKING	PTFE
9	HANDLE	A276 TYPE430(1)
10	HANDLE NUT	STAINLESS STEEL
16A	WASHER	STAINLESS STEEL
16B	NAME PLATE	STAINLESS STEEL
19	GASKET	PTFE
30	BALL SEAT	HYPATITE® PTFE
34	GLAND NUT	STAINLESS STEEL
35	CAP BOLT	STAINLESS STEEL
40	LOCK PLATE	STAINLESS STEEL
43	CONED DISC SPTING	STAINLESS STEEL
47	THRUST WASHER	PTFE(2)
126	STOPPER PIN	A276 TYPE304
A	LATCH LOCK	STAINLESS STEEL

NOTE

(1) Plastic covering.

(2) Stem—to-body grounding optional available.

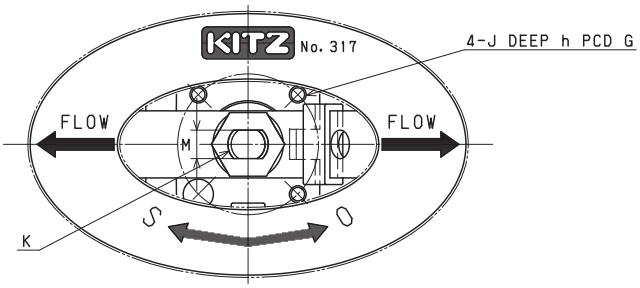

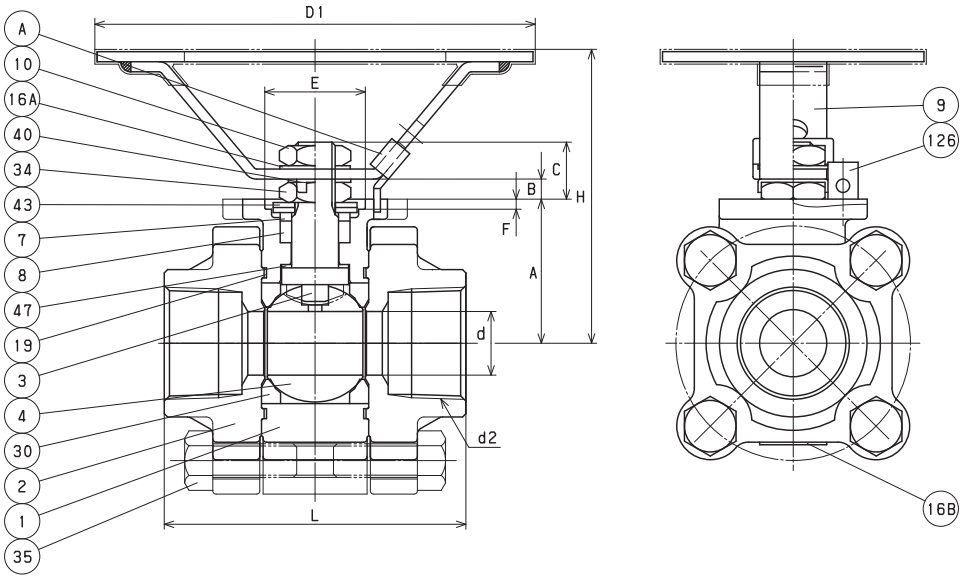

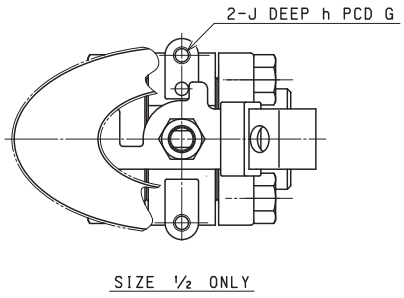

DIMENSIONS

Unit : inch

Nominal Size						Mounting Dimensions for Actuator										
in.	d	H	D1	L	d2	A	B	C	E	F	G	J	h	K	M	ISO 5211 Flange Type
1/2	0.39	2.48	3.94	2.48	NPT 1/2	1.04	0.08	0.41	—	—	1.97	1/4-20UNC	0.28	M8	0.20	—
3/4	0.55	3.07	5.12	2.80	NPT 3/4	1.38	0.17	0.56	0.98	0.12	1.42	1/4-20UNC	0.20	M10	0.24	F03
1	0.75	3.43	5.12	3.54	NPT 1	1.69	0.20	0.67	1.18	0.12	1.65	1/4-20UNC	0.24	M12	0.34	F04
1 1/4	0.94	3.35	7.09	4.06	NPT 1 1/4	1.73	0.53	1.15	1.18	0.12	1.65	1/4-20UNC	0.32	M14	0.39	F04
1 1/2	1.18	3.58	7.09	4.33	NPT 1 1/2	1.95	0.53	1.07	1.18	0.12	1.65	1/4-20UNC	0.33	M14	0.39	F04
2	1.50	3.94	7.09	5.00	NPT 2	2.24	0.46	1.14	1.38	0.12	1.97	1/4-20UNC	0.39	M16	0.39	F05

AKSC3TFZM-FS
CODE NO. 319F

KITZ

MATERIAL LIST

No.	Name of Parts	Materials
1	BODY	A216 Gr. WCB
2	CAP	A216 Gr. WCB
3	STEM	A276 TYPE316
4	BALL	A276 TYPE316 or A351 Gr,CF8M
7	GLAND	A276 TYPE316
8A	GLAND PACKING	FLEXIBLE GRAFITE
8B	SPACER PACKING	G/F PTFE
9	HANDLE	A276 TYPE430(1)
10	HANDLE NUT	STAINLESS STEEL
16A	WASHER	STAINLESS STEEL
16B	NAME PLATE	STAINLESS STEEL
19	GASKET	FLEXIBLE GRAFITE
30	BALL SEAT	HYPATITE® PTFE
34	GLAND NUT	STAINLESS STEEL
35	CAP BOLT	STAINLESS STEEL
40	LOCK PLATE	STAINLESS STEEL
43	CONED DISC SPTING	STAINLESS STEEL
47	THRUST WASHER	C/F PTFE(2) (25%CARBON FILLED)
126	STOPPER PIN	A276 TYPE304
A	LATCH LOCK	STAINLESS STEEL

NOTE

(1) Plastic covering.

(2) All valves have an anti-static thrust washer insuring positive conductivity between body and stem.

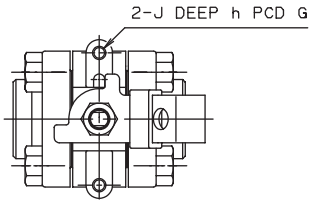

SIZE ¼ - ⅜

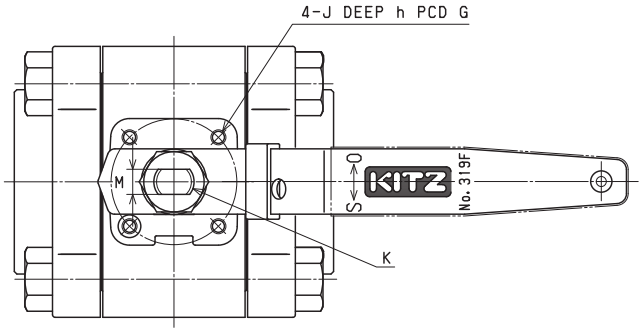

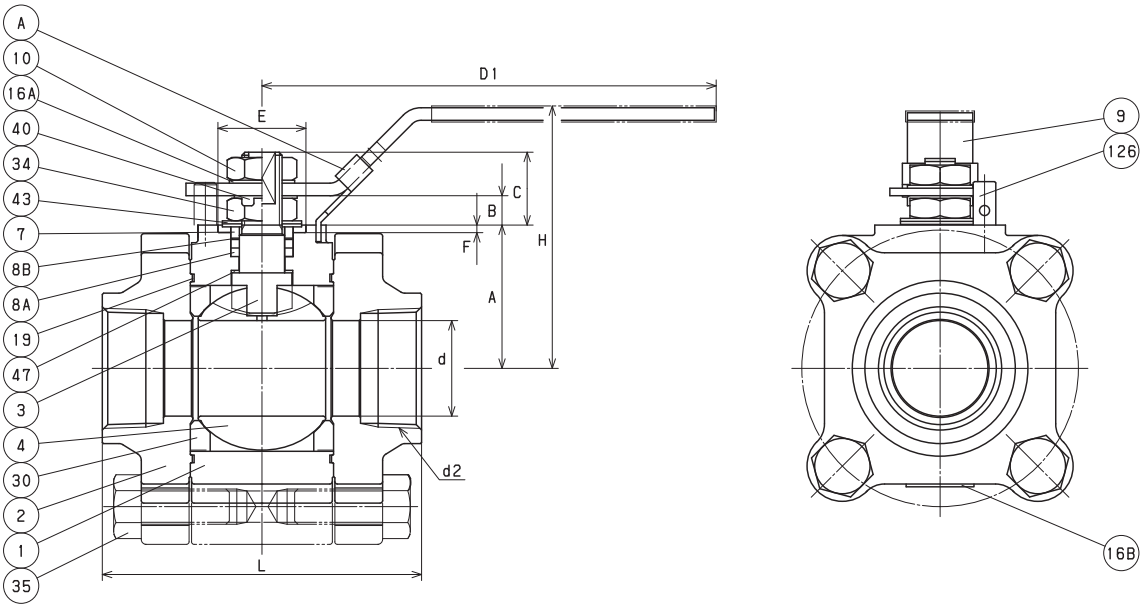

DIMENSIONS

Unit : inch

Nominal Size						Mounting Dimensions for Actuator										
in.	d	H	D1	L	d2	A	B	C	E	F	G	J	h	K	M	ISO 5211 Flange Type
1/4	0.39	1.89	4.72	2.48	NPT 1/4	1.04	0.08	0.41	—	—	1.97	1/4-20UNC	0.28	M8	0.20	—
3/8	0.39	1.89	4.72	2.48	NPT 3/8	1.04	0.08	0.41	—	—	1.97	1/4-20UNC	0.28	M8	0.20	—
1/2	0.55	2.36	5.12	2.80	NPT 1/2	1.38	0.17	0.56	0.98	0.12	1.42	1/4-20UNC	0.20	M10	0.24	F03
3/4	0.75	2.68	5.12	3.54	NPT 3/4	1.69	0.20	0.67	1.18	0.12	1.65	1/4-20UNC	0.24	M12	0.34	F04
1	0.94	3.23	5.91	4.06	NPT 1	1.73	0.53	1.15	1.18	0.12	1.65	1/4-20UNC	0.32	M14	0.39	F04
1 1/4	1.18	3.46	5.91	4.33	NPT 1 1/4	1.95	0.53	1.07	1.18	0.12	1.65	1/4-20UNC	0.32	M14	0.39	F04
1 1/2	1.50	4.09	7.09	5.00	NPT 1 1/2	2.24	0.46	1.14	1.38	0.12	1.97	1/4-20UNC	0.39	M16	0.39	F05

AKSC3TFZM-FS
CODE NO. 319F

KITZ

MATERIAL LIST

No.	Name of Parts	Materials
1	BODY	A216 Gr. WCB
2	CAP	A216 Gr. WCB
3	STEM	A276 TYPE 316
4	BALL	A351 Gr. CF8M
7	GLAND	A351 Gr. CF8
8 A	GLAND PACKING	FLEXIBLE GRAPHITE
8 B	SPACER PACKING	G/F PTFE
9	HANDLE	DUCTILE IRON
16	NAME PLATE	STAINLESS STEEL
19	GASKET	(2)
30	BALL SEAT	HYPATITE® PTFE
35	CAP BOLT	A193 Gr. B8
36	GLAND BOLT	A193 Gr. B8
40	KEY LOCK PLATE	STAINLESS STEEL
47	THRUST WASHER	25% CARBON FILLED PTFE (1)
48	SNAP RING	STAINLESS STEEL
49	STOPPER	STAINLESS STEEL
123	HANDLE BOLT	STAINLESS STEEL
124	SPRING & PIN	A313 & A276 TYPE 316
126	STOPPER PIN	STAINLESS STEEL

NOTE

(1) All valves have an anti-static thrust washer insuring positive conductivity between body and stem.
(2) Flexible graphite with stainless foil insert.

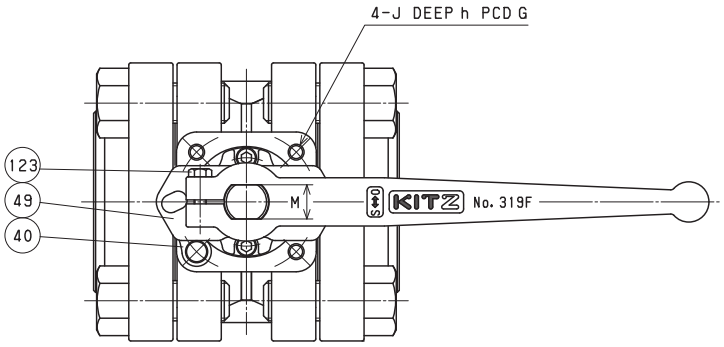

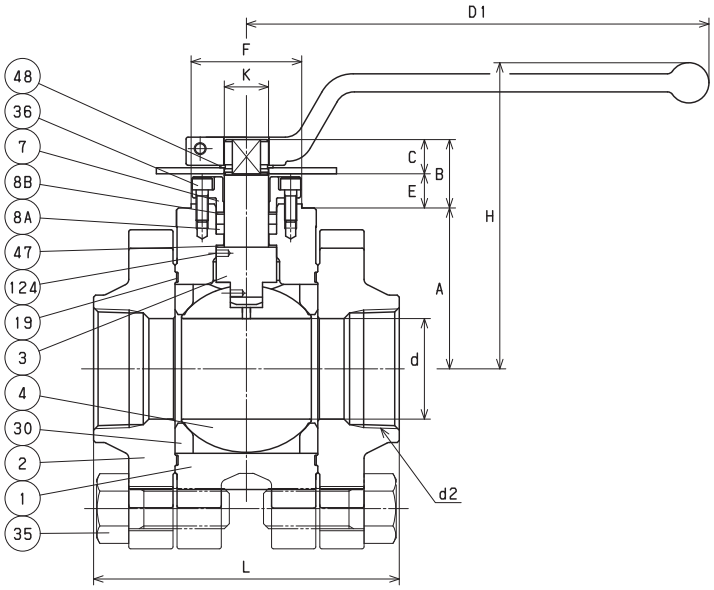

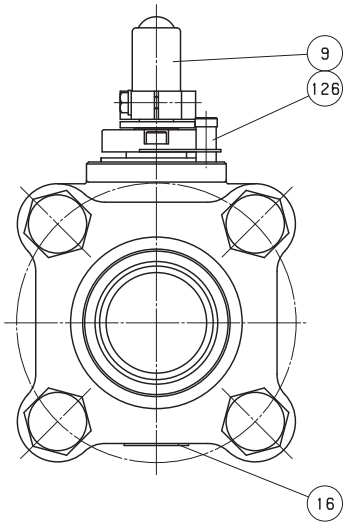

DIMENSIONS

Unit : inch

Nominal Size						Mounting Dimensions for Actuator										
in.	d	H	D1	L	d2	A	B	C	E	F	K	G	J	h	M	ISO 5211 Flange Type
2	1.97	5.98	9.06	5.98	NPT 2	3.15	1.34	0.67	0.67	2.17	0.87	2.76	5/16-18UNC	0.59	0.67	F07

AKSC3TFZM-FSO
CODE NO. 319F-LOH

MATERIAL LIST

No.	Name of Parts	Materials
1	BODY	A216 Gr. WCB
2	CAP	A216 Gr. WCB
3	STEM	A276 TYPE316
4	BALL	A276 TYPE316 or A351 Gr,CF8M
7	GLAND	A276 TYPE316
8A	GLAND PACKING	FLEXIBLE GRAFITE
8B	SPACER PACKING	G/F PTFE
9	HANDLE	A276 TYPE430(1)
10	HANDLE NUT	STAINLESS STEEL
16A	WASHER	STAINLESS STEEL
16B	NAME PLATE	STAINLESS STEEL
19	GASKET	FLEXIBLE GRAFITE
30	BALL SEAT	HYPATITE® PTFE
34	GLAND NUT	STAINLESS STEEL
35	CAP BOLT	STAINLESS STEEL
40	LOCK PLATE	STAINLESS STEEL
43	CONED DISC SPTING	STAINLESS STEEL
47	THRUST WASHER	C/F PTFE(2) (25%CARBON FILLED)
126	STOPPER PIN	A276 TYPE304
A	LATCH LOCK	STAINLESS STEEL

NOTE

(1) Plastic covering.
(2) All valves have an anti-static thrust washer insuring positive conductivity between body and stem.

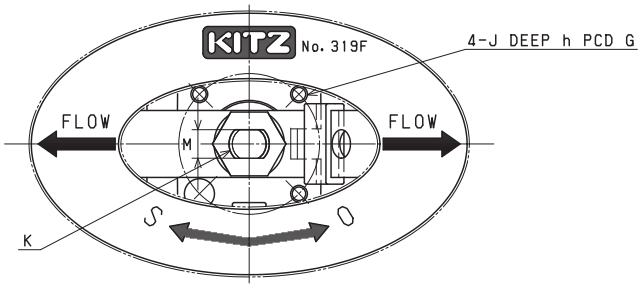

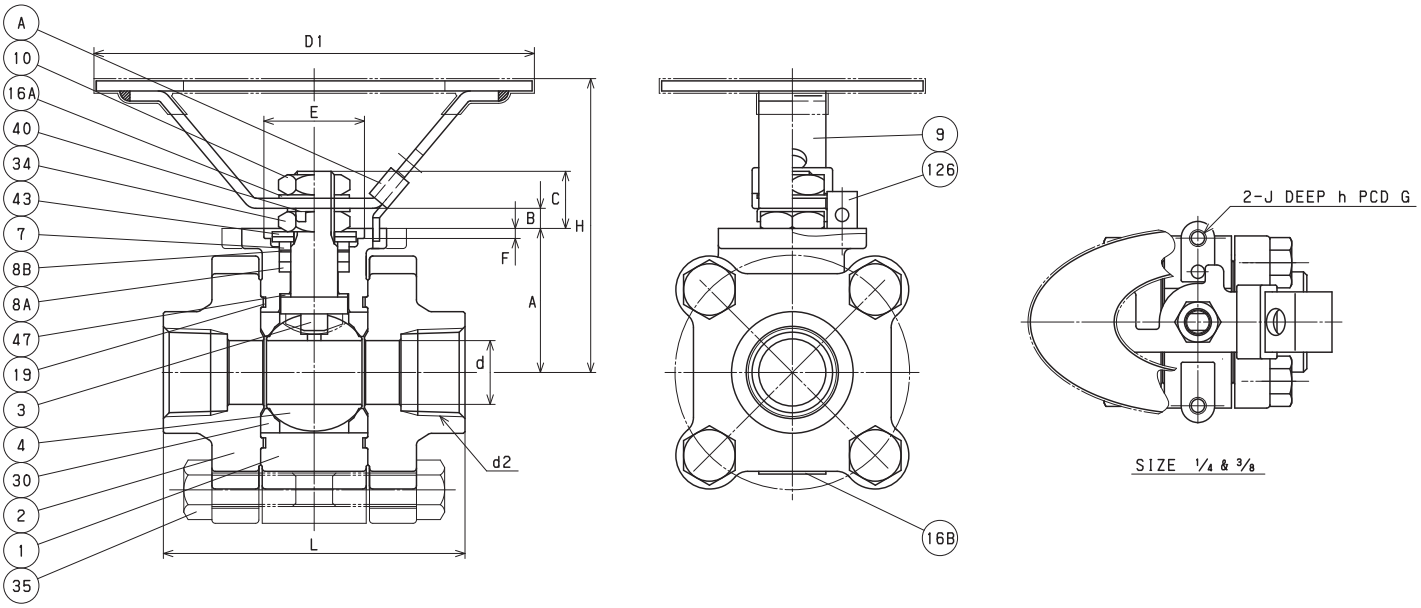

DIMENSIONS

Unit : inch

Nominal Size						Mounting Dimensions for Actuator										
in.	d	H	D1	L	d2	A	B	C	E	F	G	J	h	K	M	ISO 5211 Flange Type
1/4	0.39	2.48	3.94	2.48	NPT 1/4	1.04	0.08	0.41	—	—	1.97	1/4-20UNC	0.28	M8	0.20	—
3/8	0.39	2.48	3.94	2.48	NPT 3/8	1.04	0.08	0.41	—	—	1.97	1/4-20UNC	0.28	M8	0.20	—
1/2	0.55	3.07	5.12	2.80	NPT 1/2	1.38	0.17	0.56	0.98	0.12	1.42	1/4-20UNC	0.20	M10	0.24	F03
3/4	0.75	3.43	5.12	3.54	NPT 3/4	1.69	0.20	0.67	1.18	0.12	1.65	1/4-20UNC	0.24	M12	0.34	F04
1	0.94	3.35	7.09	4.06	NPT 1	1.73	0.53	1.15	1.18	0.12	1.65	1/4-20UNC	0.32	M14	0.39	F04
1 1/4	1.18	3.58	7.09	4.33	NPT 1 1/4	1.95	0.53	1.07	1.18	0.12	1.65	1/4-20UNC	0.32	M14	0.39	F04
1 1/2	1.50	3.94	7.09	5.00	NPT 1 1/2	2.24	0.46	1.14	1.38	0.12	1.97	1/4-20UNC	0.39	M16	0.39	F05

AKSC3THZM-FS
CODE NO. 319

KITZ

MATERIAL LIST

No.	Name of Parts	Materials
1	BODY	A216 Gr. WCB
2	CAP	A216 Gr. WCB
3	STEM	A276 TYPE316
4	BALL	A276 TYPE316 or A351 Gr,CF8M
7	GLAND	A276 TYPE316
8A	GLAND PACKING	FLEXIBLE GRAFITE
8B	SPACER PACKING	G/F PTFE
9	HANDLE	A276 TYPE430(1)
10	HANDLE NUT	STAINLESS STEEL
16A	WASHER	STAINLESS STEEL
16B	NAME PLATE	STAINLESS STEEL
19	GASKET	PTFE
30	BALL SEAT	HYPATITE® PTFE
34	GLAND NUT	STAINLESS STEEL
35	CAP BOLT	STAINLESS STEEL
40	LOCK PLATE	STAINLESS STEEL
43	CONED DISC SPTING	STAINLESS STEEL
47	THRUST WASHER	C/F PTFE(2) (25%CARBON FILLED)
126	STOPPER PIN	A276 TYPE304
A	LATCH LOCK	STAINLESS STEEL

NOTE

(1) Plastic covering.

(2) All valves have an anti-static thrust washer insuring positive conductivity between body and stem.

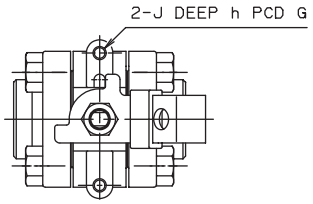

SIZE ½ ONLY

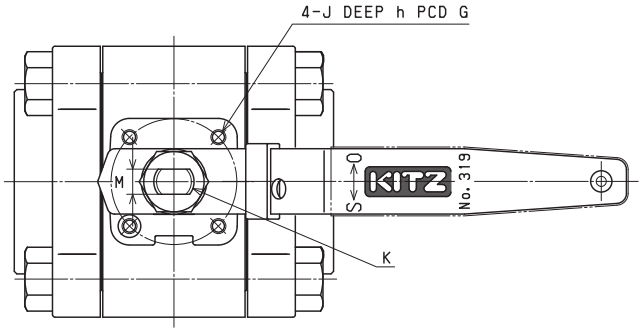

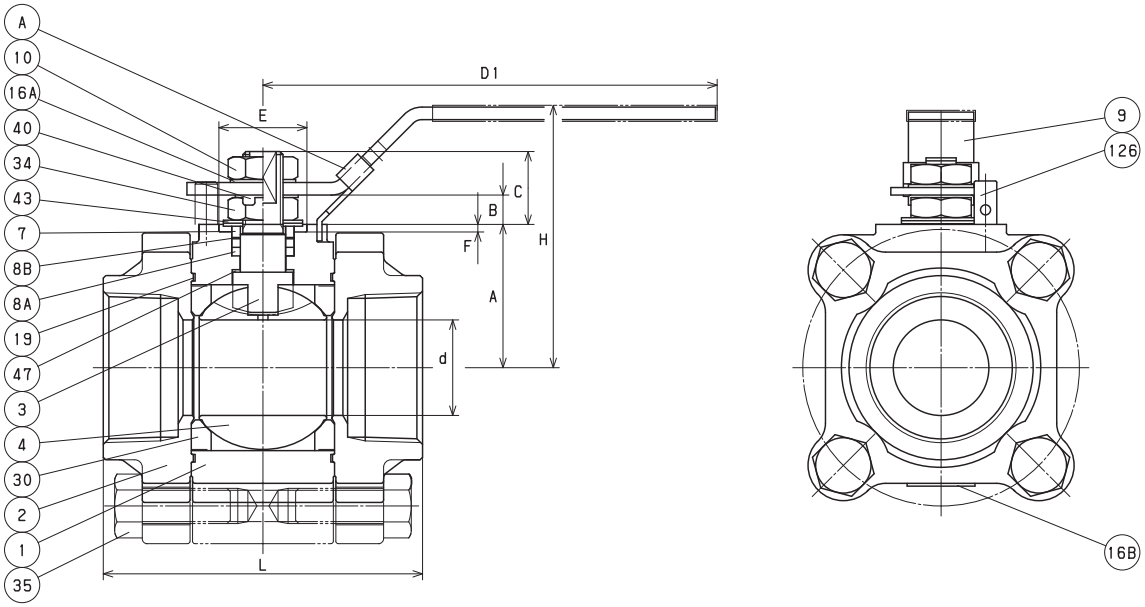

DIMENSIONS

Unit : inch

Nominal Size						Mounting Dimensions for Actuator										
in.	d	H	D1	L	d2	A	B	C	E	F	G	J	h	K	M	ISO 5211 Flange Type
1/2	0.39	1.89	4.72	2.48	NPT 1/2	1.04	0.08	0.41	—	—	1.97	1/4-20UNC	0.28	M8	0.20	—
3/4	0.55	2.36	5.12	2.80	NPT 3/4	1.38	0.17	0.56	0.98	0.12	1.42	1/4-20UNC	0.20	M10	0.24	F03
1	0.75	2.68	5.12	3.54	NPT 1	1.69	0.20	0.67	1.18	0.12	1.65	1/4-20UNC	0.24	M12	0.34	F04
1 1/4	0.94	3.23	5.91	4.06	NPT 1 1/4	1.73	0.53	1.15	1.18	0.12	1.65	1/4-20UNC	0.32	M14	0.39	F04
1 1/2	1.18	3.46	5.91	4.33	NPT 1 1/2	1.95	0.53	1.07	1.18	0.12	1.65	1/4-20UNC	0.33	M14	0.39	F04
2	1.50	4.09	7.09	5.00	NPT 2	2.24	0.46	1.14	1.38	0.12	1.97	1/4-20UNC	0.39	M16	0.39	F05

AKSC3THZM-FS
CODE NO. 319

KITZ

MATERIAL LIST

No.	Name of Parts	Materials
1	BODY	A216 Gr. WCB
2	CAP	A216 Gr. WCB
3	STEM	A276 TYPE 316
4	BALL	A351 Gr. CF8M
7	GLAND	A351 Gr. CF8
8 A	GLAND PACKING	FLEXIBLE GRAPHITE
8 B	SPACER PACKING	G/F PTFE
9	HANDLE	DUCTILE IRON
16	NAME PLATE	STAINLESS STEEL
19	GASKET	(2)
30	BALL SEAT	HYPATITE® PTFE
35	CAP BOLT	A193 Gr. B8
36	GLAND BOLT	A193 Gr. B8
40	KEY LOCK PLATE	STAINLESS STEEL
47	THRUST WASHER	25% CARBON FILLED PTFE (1)
48	SNAP RING	STAINLESS STEEL
49	STOPPER	STAINLESS STEEL
123	HANDLE BOLT	STAINLESS STEEL
124	SPRING & PIN	A313 & A276 TYPE 316
126	STOPPER PIN	STAINLESS STEEL

NOTE

(1) All valves have an anti-static thrust washer insuring positive conductivity between body and stem.

(2) Flexible graphite with stainless foil insert.

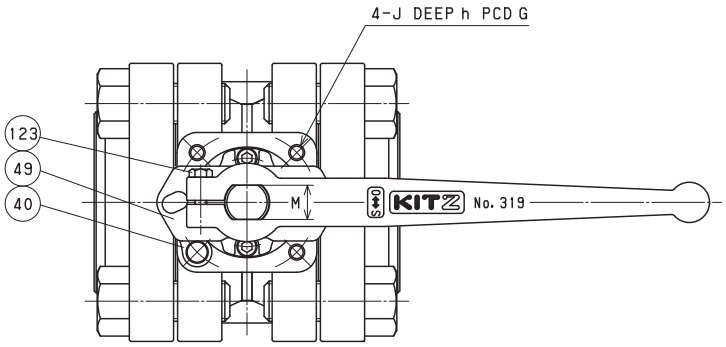

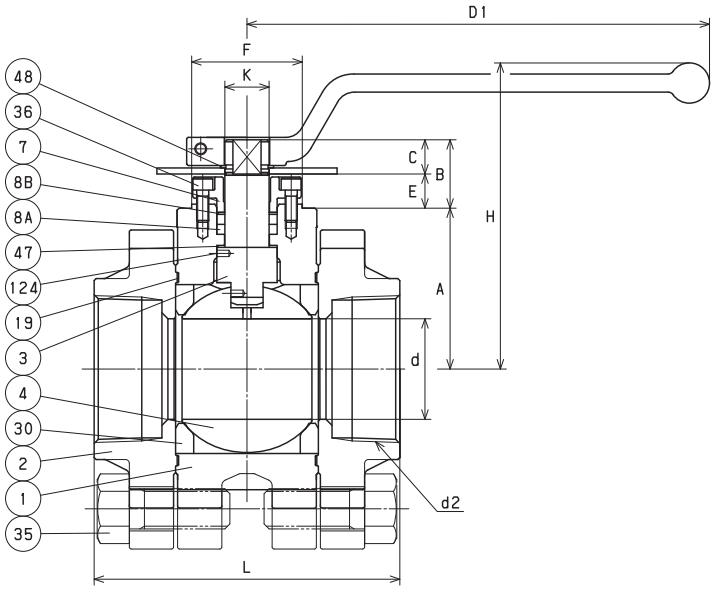

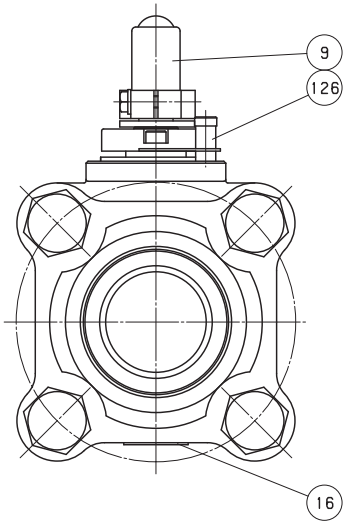

DIMENSIONS

Unit : inch

Nominal Size						Mounting Dimensions for Actuator										
in.	d	H	D1	L	d2	A	B	C	E	F	K	G	J	h	M	ISO 5211 Flange Type
2 1/2	1.97	5.98	9.06	5.98	NPT 2 1/2	3.15	1.34	0.67	0.67	2.17	0.87	2.78	5/16-18UNC	0.60	0.67	F07

AKSC3THZM-FSO
CODE NO. 319-LOH

KITZ

MATERIAL LIST

No.	Name of Parts	Materials
1	BODY	A216 Gr. WCB
2	CAP	A216 Gr. WCB
3	STEM	A276 TYPE316
4	BALL	A276 TYPE316 or A351 Gr,CF8M
7	GLAND	A276 TYPE316
8A	GLAND PACKING	FLEXIBLE GRAFITE
8B	SPACER PACKING	G/F PTFE
9	HANDLE	A276 TYPE430(1)
10	HANDLE NUT	STAINLESS STEEL
16A	WASHER	STAINLESS STEEL
16B	NAME PLATE	STAINLESS STEEL
19	GASKET	PTFE
30	BALL SEAT	HYPATITE® PTFE
34	GLAND NUT	STAINLESS STEEL
35	CAP BOLT	STAINLESS STEEL
40	LOCK PLATE	STAINLESS STEEL
43	CONED DISC SPTING	STAINLESS STEEL
47	THRUST WASHER	C/F PTFE(2) (25%CARBON FILLED)
126	STOPPER PIN	A276 TYPE304
A	LATCH LOCK	STAINLESS STEEL

NOTE

(1) Plastic covering.

(2) All valves have an anti-static thrust washer insuring positive conductivity between body and stem.

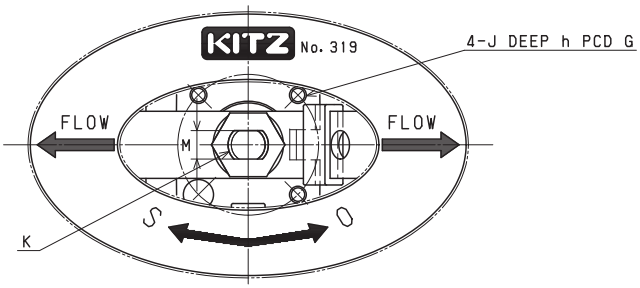

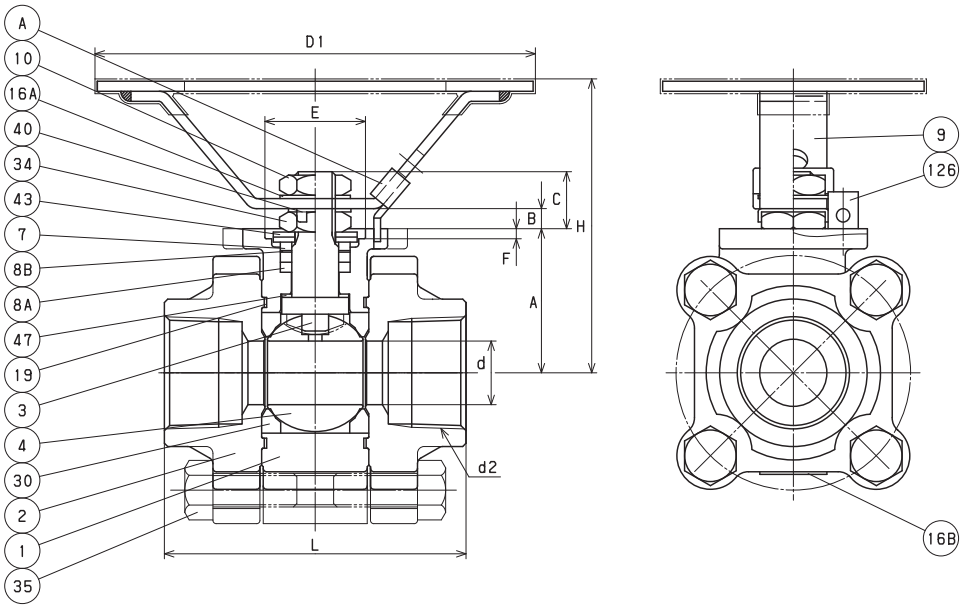

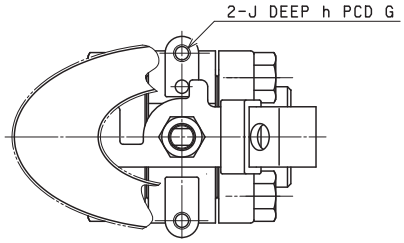

SIZE ½ ONLY

DIMENSIONS

Unit : inch

Nominal Size						Mounting Dimensions for Actuator										
in.	d	H	D1	L	d2	A	B	C	E	F	G	J	h	K	M	ISO 5211 Flange Type
1/2	0.39	2.48	3.94	2.48	NPT 1/2	1.04	0.08	0.41	—	—	1.97	1/4-20UNC	0.28	M8	0.20	—
3/4	0.55	3.07	5.12	2.80	NPT 3/4	1.38	0.17	0.56	0.98	0.12	1.42	1/4-20UNC	0.20	M10	0.24	F03
1	0.75	3.43	5.12	3.54	NPT 1	1.69	0.20	0.67	1.18	0.12	1.65	1/4-20UNC	0.24	M12	0.34	F04
1 1/4	0.94	3.35	7.09	4.06	NPT 1 1/4	1.73	0.53	1.15	1.18	0.12	1.65	1/4-20UNC	0.32	M14	0.39	F04
1 1/2	1.18	3.58	7.09	4.33	NPT 1 1/2	1.95	0.53	1.07	1.18	0.12	1.65	1/4-20UNC	0.33	M14	0.39	F04
2	1.50	3.94	7.09	5.00	NPT 2	2.24	0.46	1.14	1.38	0.12	1.97	1/4-20UNC	0.39	M16	0.39	F05

AKUTKZM-FS
CODE NO. 129

KITZ

MATERIAL LIST

No.	Name of Parts	Materials
1	BODY	A351 Gr. CF8M
3	STEM	A276 TYPE 316
4	BALL	A276 TYPE 316
7	GLAND	A276 TYPE 304
8	GLAND PACKING	FLEXIBLE GRAPHITE
9	HANDLE	A276 TYPE 430 (1)
10	NUT	A194 Gr. 8
16	WASHER	A276 TYPE 304 (SIZE 1/4, 3/8, 1 & OVER)
29	INSERT	A276 TYPE 316 or A351 Gr. CF8M
30	BALL SEAT	HYPATITE® PTFE
34	NUT	A194 Gr. 8 (SIZE 1/2 & OVER)
47	THRUST WASHER	C/F PTFE
A	LATCH LOCK	A276 TYPE 430 (SIZE 1/2 & OVER)

NOTE

(1) Plastic covering.

(2) Valve rating 2000WOG (size 1/4 to 1), 1500WOG (size 1 1/4 to 2).

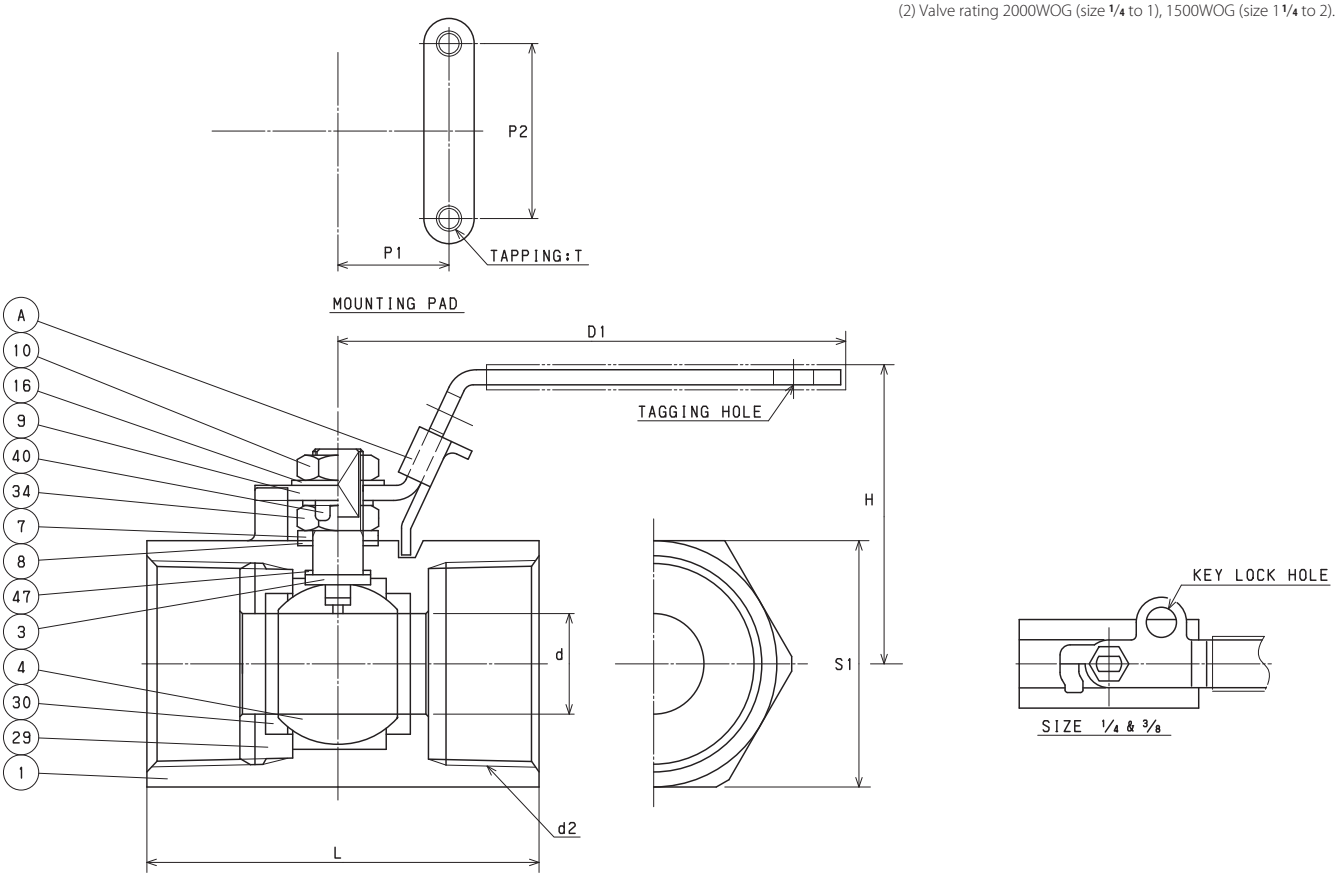

DIMENSIONS

Unit : inch

Nominal Size	d	H	D1	L	d2	S1	P1	P2	T
1/4	0.18	1.12	2.80	1.97	NPT 1/4	0.72	—	—	—
3/8	0.27	1.16	3.23	2.05	NPT 3/8	0.87	—	—	—
1/2	0.36	1.93	3.54	2.56	NPT 1/2	1.10	0.50	1.12	No.10-24UNC
3/4	0.49	2.05	3.54	2.76	NPT 3/4	1.34	0.57	1.37	No.10-24UNC
1	0.63	2.15	4.33	3.15	NPT 1	1.57	0.87	1.37	No.10-24UNC
1 1/4	0.79	2.34	4.33	3.74	NPT 1 1/4	1.97	1.00	1.50	1/4-20UNC
1 1/2	0.96	2.68	5.51	3.94	NPT 1 1/2	2.24	1.00	1.50	1/4-20UNC
2	1.26	2.89	5.51	4.49	NPT 2	2.72	1.00	1.50	1/4-20UNC

AKUTKZM-FSO
CODE NO. 129-LOH

KITZ

MATERIAL LIST

No.	Name of Parts	Materials
1	BODY	A351 Gr. CF8M
3	STEM	A276 TYPE 316
4	BALL	A276 TYPE 316
7	GLAND	A276 TYPE 304
8	GLAND PACKING	FLEXIBLE GRAPHITE
9	HANDLE	A276 TYPE 430 (1)
10	NUT	A194 Gr. 8
16	WASHER	A276 TYPE 304 (SIZE 1/4, 3/8, 1 & OVER)
29	INSERT	A276 TYPE 316 or A351 Gr. CF8M
30	BALL SEAT	HYPATITE® PTFE
34	NUT	A194 Gr. 8 (SIZE 1/2 & OVER)
47	THRUST WASHER	C/F PTFE
A	LATCH LOCK	A276 TYPE 430 (SIZE 1/2 & OVER)

NOTE

(1) Plastic covering.

(2) Valve rating 2000WOG (size 1/4 to 1), 1500WOG (size 1 1/4 to 2).

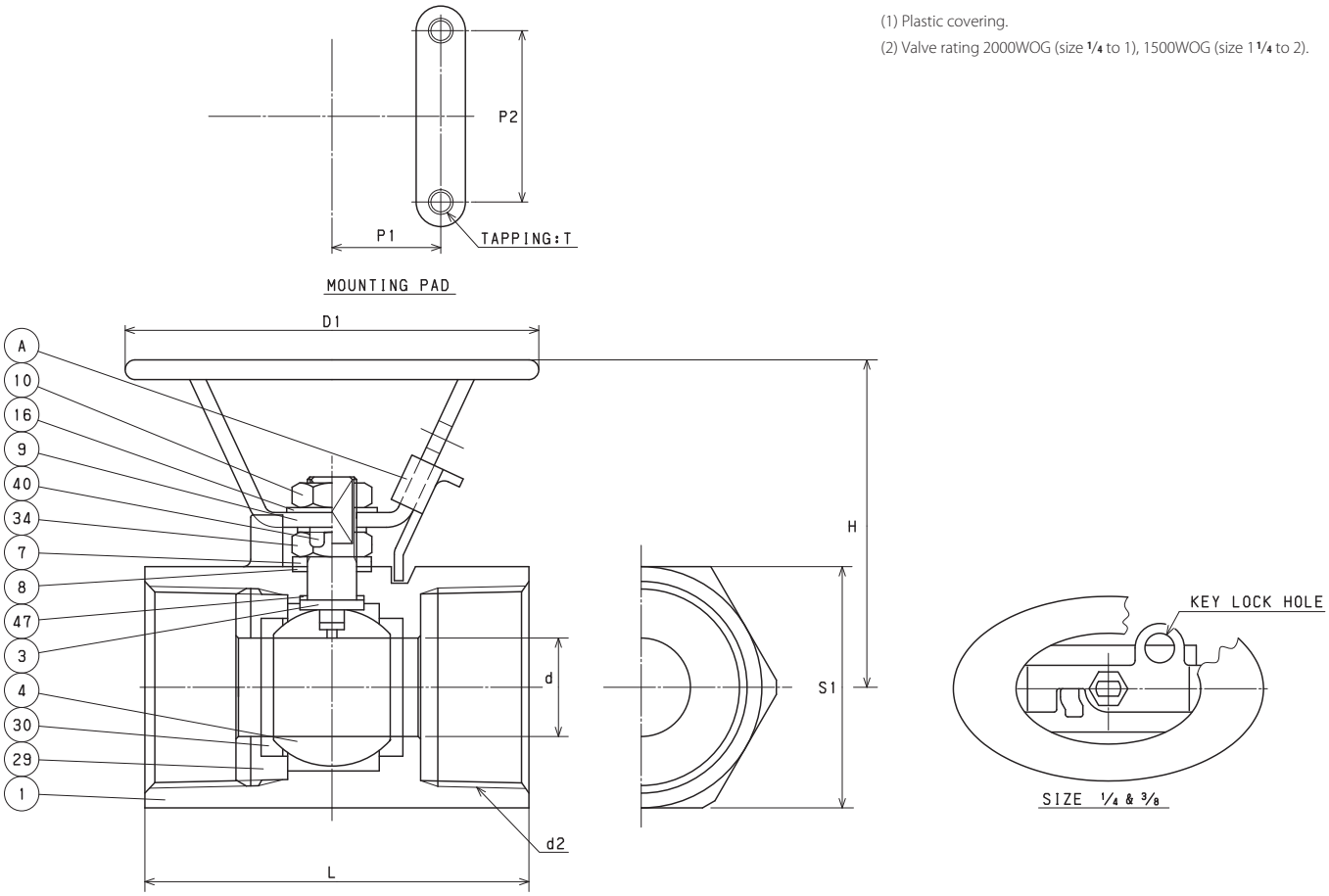

DIMENSIONS

Unit : inch

Nominal Size	d	H	D1	L	d2	S1	P1	P2	T
1/4	0.18	1.71	3.94	1.97	NPT 1/4	0.72	—	—	—
3/8	0.27	1.87	3.94	2.05	NPT 3/8	0.87	—	—	—
1/2	0.36	2.13	3.94	2.56	NPT 1/2	1.10	0.50	1.12	No.10-24UNC
3/4	0.49	2.24	3.94	2.76	NPT 3/4	1.34	0.57	1.37	No.10-24UNC
1	0.63	2.38	3.94	3.15	NPT 1	1.57	0.87	1.37	No.10-24UNC
1 1/4	0.79	2.58	3.94	3.74	NPT 1 1/4	1.97	1.00	1.50	1/4-20UNC
1 1/2	0.96	3.07	5.12	3.94	NPT 1 1/2	2.24	1.00	1.50	1/4-20UNC
2	1.26	3.29	5.12	4.49	NPT 2	2.72	1.00	1.50	1/4-20UNC

AKUTHZM
CODE NO. 227

KITZ

MATERIAL LIST

No.	Name of Parts	Materials
1	BODY	A351 Gr. CF8M
2	BODY CAP	A351 Gr. CF8M
3	STEM	A276 TYPE 316
4	BALL	A276 TYPE 316
7	GLAND	A276 TYPE 304
8	GLAND PACKING	PTFE
9	HANDLE	A276 TYPE 430 (1)
10	HANDLE NUT	A194 Gr. 8
16	WASHER	A276 TYPE 304
19	GASKET	PTFE
30	BALL SEAT	HYPATITE® PTFE
47	THRUST WASHER	G/F PTFE
A	LATCH LOCK	A276 TYPE 430

NOTE

(1) Plastic covering.
(2) BS 5351 Class 800 (size 1/4 to 1), KITZ standard (size 1 1/4 to 2).
(3) Valve rating 2000WOG (size 1/4 to 1), 1500WOG (size 1 1/4 to 2).

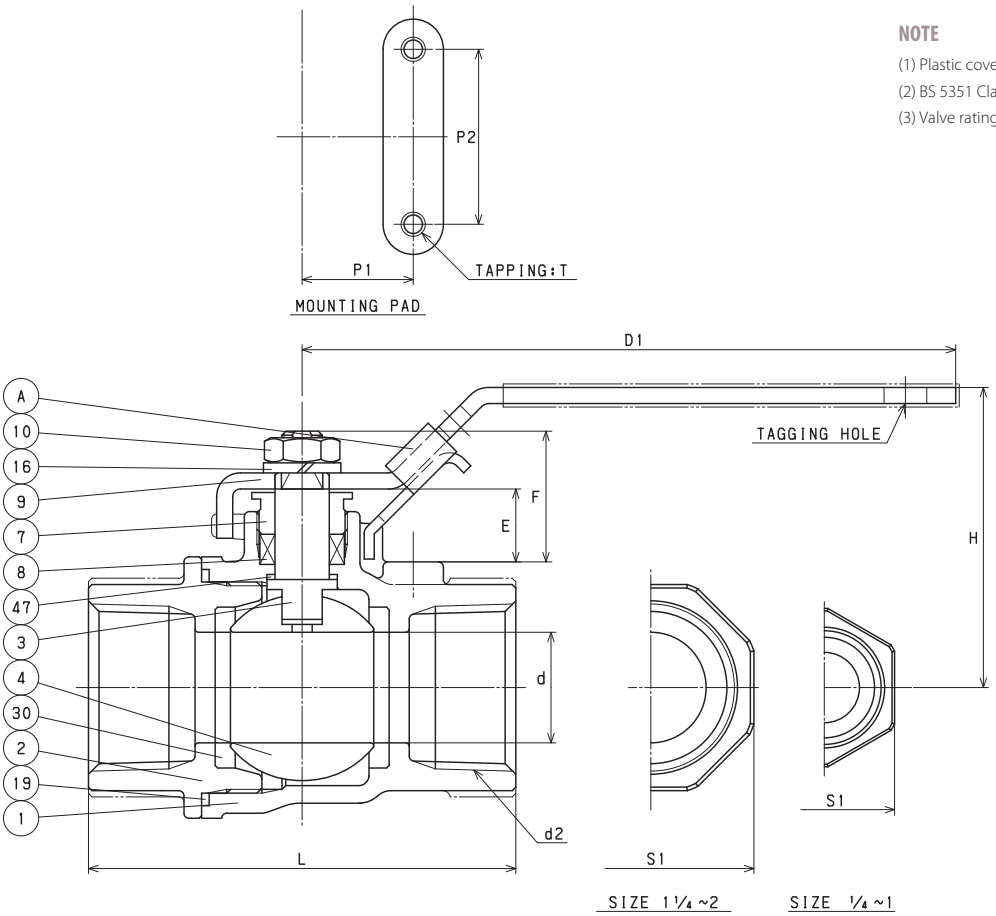

DIMENSIONS

Unit : inch

Nominal Size	d	H	D1	L	d2	S1	P1	P2	E	F	T
1/4	0.37	1.99	3.94	2.09	NPT 1/4	0.83	0.50	1.12	0.57	0.93	No.10-24UNC
3/8	0.37	1.99	3.94	2.09	NPT 3/8	0.95	0.50	1.12	0.57	0.93	No.10-24UNC
1/2	0.39	2.29	4.53	2.44	NPT 1/2	1.10	0.50	1.12	0.53	0.93	No.10-24UNC
3/4	0.59	2.47	4.53	2.83	NPT 3/4	1.38	0.87	1.37	0.55	1.00	No.10-24UNC
1	0.79	2.50	5.31	3.35	NPT 1	1.62	0.87	1.37	0.57	1.06	No.10-24UNC
1 1/4	0.98	2.66	5.31	3.70	NPT 1 1/4	2.05	0.93	1.50	0.53	1.02	1/4-20UNC
1 1/2	1.26	3.27	6.10	4.21	NPT 1 1/2	2.32	0.93	1.50	0.67	1.24	1/4-20UNC
2	1.57	3.58	7.48	4.72	NPT 2	2.84	0.93	1.50	0.59	1.24	1/4-20UNC

AKUTHZM-O
CODE NO. 227-LOH

KITZ

MATERIAL LIST

No.	Name of Parts	Materials
1	BODY	A351 Gr. CF8M
2	BODY CAP	A351 Gr. CF8M
3	STEM	A276 TYPE 316
4	BALL	A276 TYPE 316
7	GLAND	A276 TYPE 304
8	GLAND PACKING	PTFE
9	HANDLE	A276 TYPE 430 (1)
10	HANDLE NUT	A194 Gr. 8
16	WASHER	A276 TYPE 304
19	GASKET	PTFE
30	BALL SEAT	HYPATITE® PTFE
47	THRUST WASHER	G/F PTFE
A	LATCH LOCK	A276 TYPE 430

NOTE

(1) Plastic covering.
(2) BS 5351 Class 800 (size 1/4 to 1), KITZ standard (size 1 1/4 to 2).
(3) Valve rating 2000WOG (size 1/4 to 1), 1500WOG (size 1 1/4 to 2).

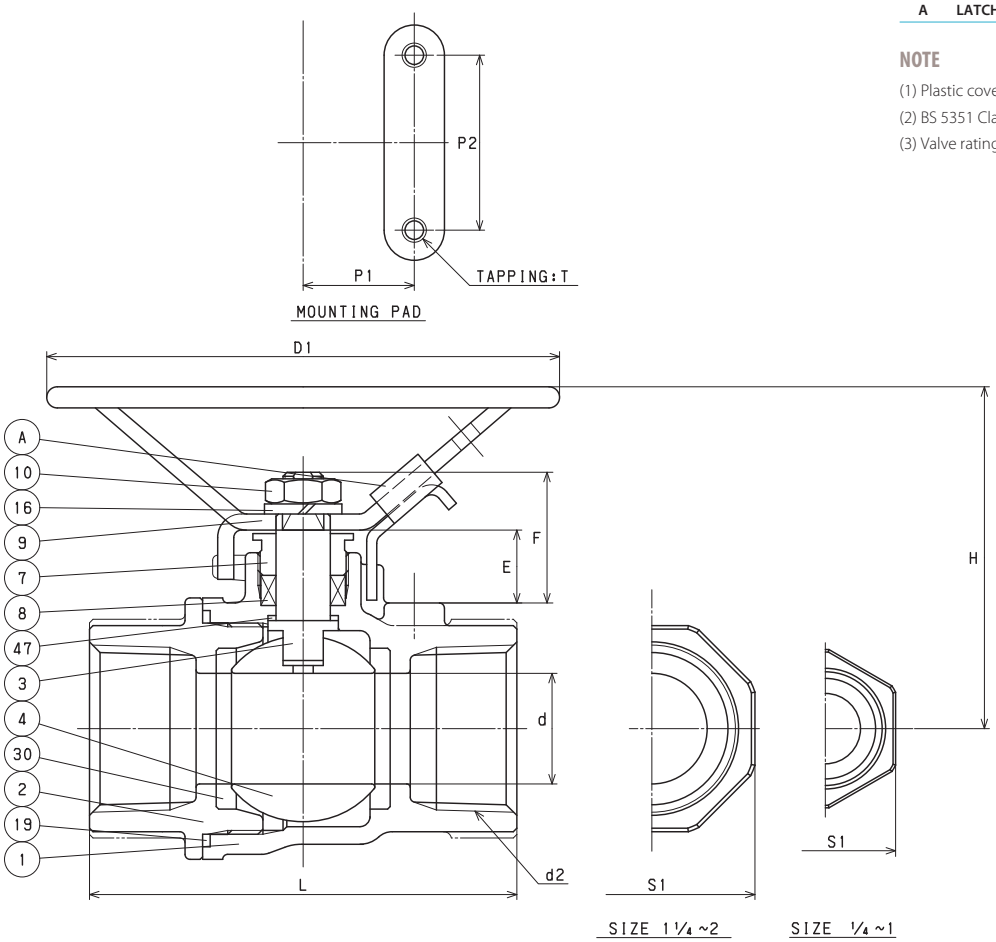

DIMENSIONS

Unit : inch

Nominal Size	d	H	D1	L	d2	S1	P1	P2	E	F	T
1/4	0.37	2.42	3.94	2.09	NPT 1/4	0.83	0.50	1.12	0.57	0.93	No.10-24UNC
3/8	0.37	2.42	3.94	2.09	NPT 3/8	0.95	0.50	1.12	0.57	0.93	No.10-24UNC
1/2	0.39	2.46	3.94	2.44	NPT 1/2	1.10	0.50	1.12	0.53	0.93	No.10-24UNC
3/4	0.59	2.64	3.94	2.83	NPT 3/4	1.38	0.87	1.37	0.55	1.00	No.10-24UNC
1	0.79	2.70	3.94	3.35	NPT 1	1.61	0.87	1.37	0.57	1.06	No.10-24UNC
1 1/4	0.98	2.85	3.94	3.70	NPT 1 1/4	2.05	0.93	1.50	0.53	1.02	1/4-20UNC
1 1/2	1.26	3.66	5.12	4.21	NPT 1 1/2	2.32	0.93	1.50	0.67	1.24	1/4-20UNC
2	1.57	3.98	7.09	4.72	NPT 2	2.84	0.93	1.50	0.59	1.24	1/4-20UNC

AKUTHZM-FS
CODE NO. 229

KITZ

MATERIAL LIST

No.	Name of Parts	Materials
1	BODY	A351 Gr. CF8M
2	BODY CAP	A351 Gr. CF8M
3	STEM	A276 TYPE 316
4	BALL	A276 TYPE 316
7	GLAND	A276 TYPE 304
8	GLAND PACKING	FLEXIBLE GRAPHITE
9	HANDLE	A276 TYPE 430 (1)
10	HANDLE NUT	A194 Gr. 8
16	WASHER	A276 TYPE 304
19	GASKET	FLEXIBLE GRAPHITE
30	BALL SEAT	HYPATITE® PTFE
47	THRUST WASHER	G/F PTFE
A	LATCH LOCK	A276 TYPE 430

NOTE

(1) Plastic covering.

(3) BS 5351 Class 800 (size 1/4 to 1), KITZ standard (size 1 1/4 to 2).

(4) Valve rating 2000WOG (size 1/4 to 1), 1500WOG (size 1 1/4 to 2).

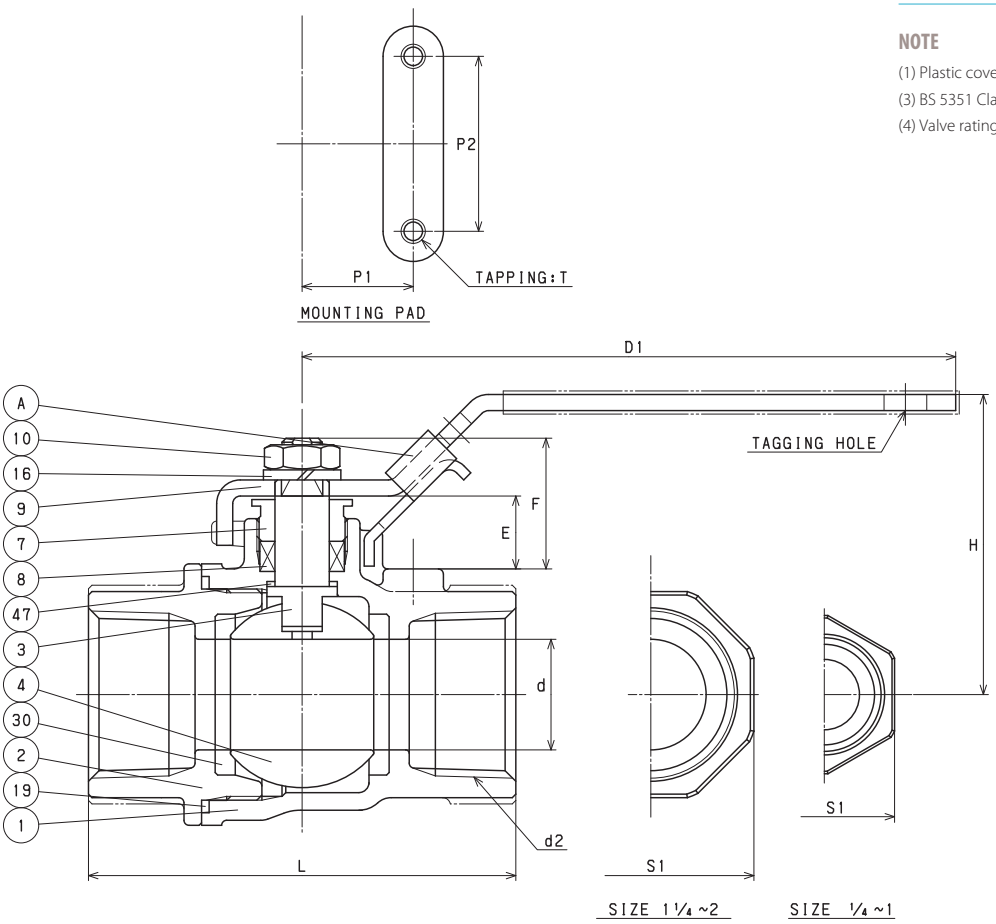

DIMENSIONS

Unit : inch

Nominal Size	d	H	D1	L	d2	S1	P1	P2	E	F	T
1/4	0.37	1.99	3.94	2.09	NPT 1/4	0.83	0.50	1.12	0.57	0.93	No.10-24UNC
3/8	0.37	1.99	3.94	2.09	NPT 3/8	0.95	0.50	1.12	0.57	0.93	No.10-24UNC
1/2	0.39	2.29	4.53	2.44	NPT 1/2	1.10	0.50	1.12	0.53	0.93	No.10-24UNC
3/4	0.59	2.47	4.53	2.83	NPT 3/4	1.38	0.87	1.37	0.55	1.00	No.10-24UNC
1	0.79	2.50	5.31	3.35	NPT 1	1.61	0.87	1.37	0.57	1.06	No.10-24UNC
1 1/4	0.98	2.66	5.31	3.70	NPT 1 1/4	2.05	0.93	1.50	0.53	1.02	1/4-20UNC
1 1/2	1.26	3.27	6.10	4.21	NPT 1 1/2	2.32	0.93	1.50	0.67	1.24	1/4-20UNC
2	1.57	3.58	7.48	4.72	NPT 2	2.84	0.93	1.50	0.59	1.24	1/4-20UNC

AKUTHZM-FSO
CODE NO. 229-LOH

KITZ

MATERIAL LIST

No.	Name of Parts	Materials
1	BODY	A351 Gr. CF8M
2	BODY CAP	A351 Gr. CF8M
3	STEM	A276 TYPE 316
4	BALL	A276 TYPE 316
7	GLAND	A276 TYPE 304
8	GLAND PACKING	FLEXIBLE GRAPHITE
9	HANDLE	A276 TYPE 430 (1)
10	HANDLE NUT	A194 Gr. 8
16	WASHER	A276 TYPE 304
19	GASKET	FLEXIBLE GRAPHITE
30	BALL SEAT	HYPATITE® PTFE
47	THRUST WASHER	G/F PTFE
A	LATCH LOCK	A276 TYPE 430

NOTE

(1) Plastic covering.

(2) BS 5351 Class 800 (size 1/4 to 1), KITZ standard (size 1 1/4 to 2).

(3) Valve rating 2000WOG (size 1/4 to 1), 1500WOG (size 1 1/4 to 2).

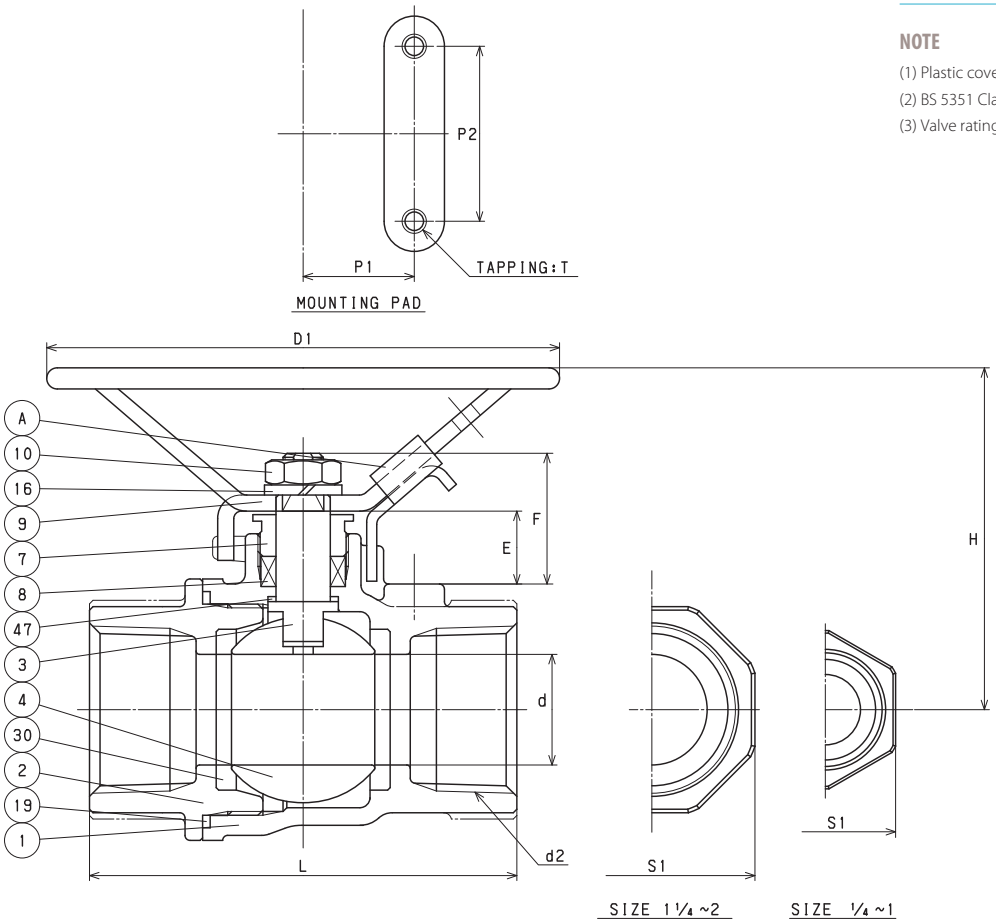

DIMENSIONS

Unit : inch

Nominal Size	d	H	D1	L	d2	S1	P1	P2	E	F	T
1/4	0.37	2.42	3.94	2.09	NPT 1/4	0.83	0.50	1.12	0.57	0.93	No.10-24UNC
3/8	0.37	2.42	3.94	2.09	NPT 3/8	0.95	0.50	1.12	0.57	0.93	No.10-24UNC
1/2	0.39	2.46	3.94	2.44	NPT 1/2	1.10	0.50	1.12	0.53	0.93	No.10-24UNC
3/4	0.59	2.64	3.94	2.83	NPT 3/4	1.38	0.87	1.37	0.55	1.00	No.10-24UNC
1	0.79	2.70	3.94	3.35	NPT 1	1.61	0.87	1.50	0.57	1.06	No.10-24UNC
1 1/4	0.98	2.85	3.94	3.70	NPT 1 1/4	2.05	0.93	1.50	0.53	1.02	1/4-20UNC
1 1/2	1.26	3.66	5.12	4.21	NPT 1 1/2	2.32	0.93	1.50	0.67	1.24	1/4-20UNC
2	1.57	3.98	7.09	4.72	NPT 2	2.84	0.93	1.50	0.59	1.24	1/4-20UNC

AKUTHWZM
CODE NO. 247

KITZ

MATERIAL LIST

No.	Name of Parts	Materials
1	BODY	A351 Gr. CF8M
2	BODY CAP	A351 Gr. CF8M
3	STEM	A276 TYPE 316
4	BALL	A276 TYPE 316
7	GLAND	A276 TYPE 304
8	GLAND PACKING	PTFE
9	HANDLE	A276 TYPE 430 (1)
10	HANDLE NUT	A194 Gr. 8
16	WASHER	A276 TYPE 304
30	BALL SEAT	HYPATITE® PTFE
47	THRUST WASHER	G/F PTFE
A	LATCH LOCK	A276 TYPE 304

NOTE

(1) Plastic covering.
(2) BS 5351 Class 800 (size 1/4 to 1), KITZ standard (size 1 1/4 to 2).
(3) Valve rating 2000WOG (size 1/4 to 1), 1500WOG (size 1 1/4 to 2).

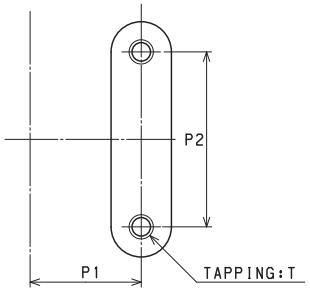

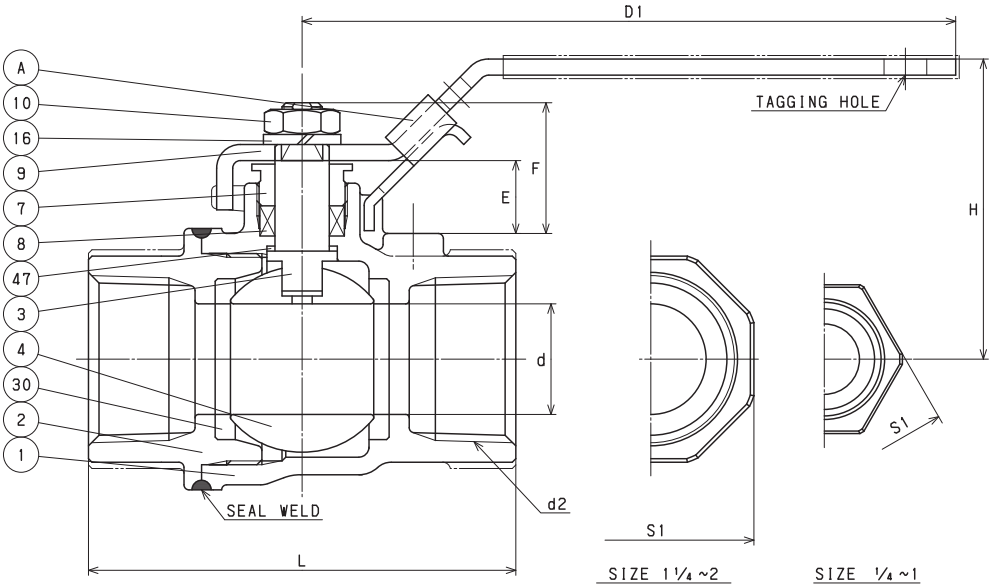

DIMENSIONS

Unit : inch

Nominal Size	d	H	D1	L	d2	S1	P1	P2	E	F	T
1/4	0.38	1.97	3.94	2.08	NPT 1/4	0.83	0.50	1.12	0.39	0.73	No.10-24UNC
3/8	0.46	1.97	3.94	2.08	NPT 3/8	0.95	0.50	1.12	0.43	0.76	No.10-24UNC
1/2	0.50	2.30	4.53	2.40	NPT 1/2	1.10	0.50	1.12	0.52	0.96	No.10-24UNC
3/4	0.59	2.42	4.53	2.71	NPT 3/4	1.38	0.87	1.37	0.50	0.93	No.10-24UNC
1	0.78	2.49	5.31	3.25	NPT 1	1.61	0.87	1.37	0.62	1.19	No.10-24UNC
1 1/4	1.00	2.65	5.31	3.54	NPT 1 1/4	2.05	0.93	1.50	0.61	1.19	1/4-20UNC
1 1/2	1.26	3.40	6.14	4.13	NPT 1 1/2	2.32	0.93	1.50	0.86	1.45	1/4-20UNC
2	1.50	3.64	7.48	4.61	NPT 2	2.84	0.93	1.50	0.83	1.42	1/4-20UNC

AKUTHWZM-O
CODE NO. 247-LOH

KITZ

MATERIAL LIST

No.	Name of Parts	Materials
1	BODY	A351 Gr. CF8M
2	BODY CAP	A351 Gr. CF8M
3	STEM	A276 TYPE 316
4	BALL	A276 TYPE 316
7	GLAND	A276 TYPE 304
8	GLAND PACKING	PTFE
9	HANDLE	A276 TYPE 430 (1)
10	HANDLE NUT	A194 Gr. 8
16	WASHER	A276 TYPE 304
30	BALL SEAT	HYPATITE® PTFE
47	THRUST WASHER	G/F PTFE
A	LATCH LOCK	A276 TYPE 304

NOTE

(1) Plastic covering.
(2) BS 5351 Class 800 (size 1/4 to 1), KITZ standard (size 1 1/4 to 2).
(3) Valve rating 2000WOG (size 1/4 to 1), 1500WOG (size 1 1/4 to 2).

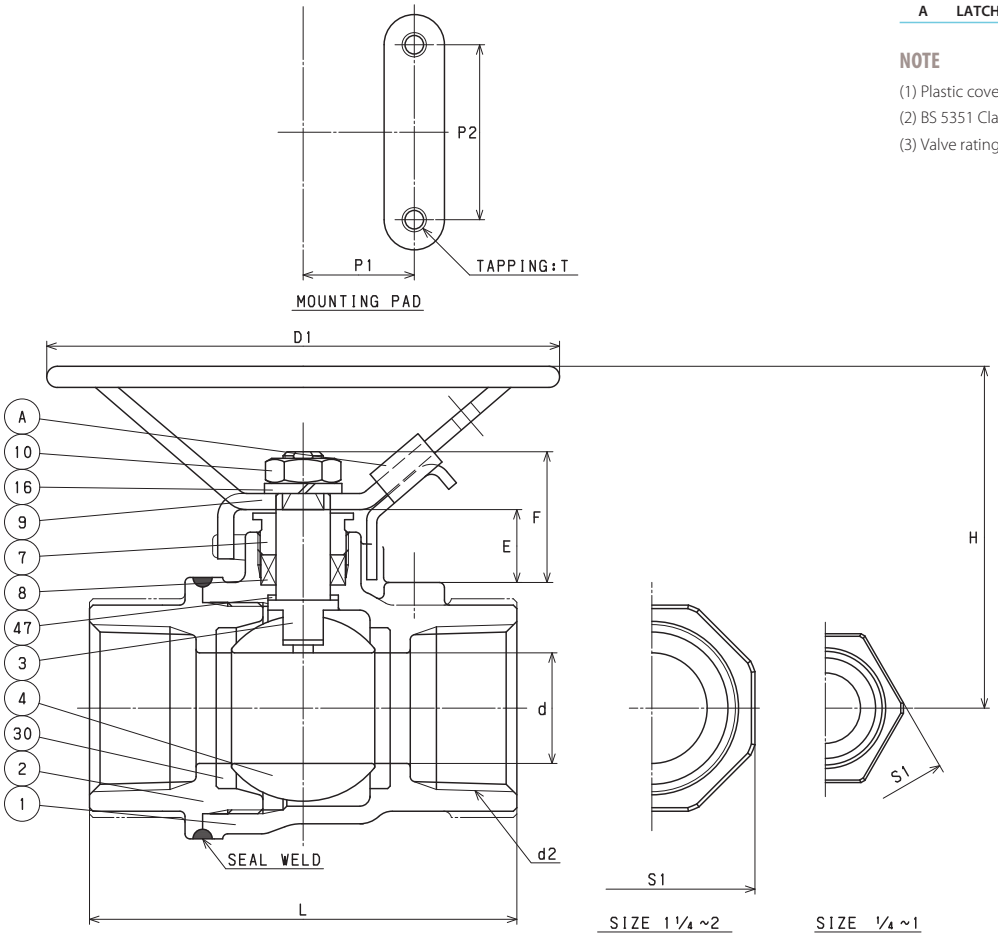

DIMENSIONS

Unit : inch

Nominal Size	d	H	D1	L	d2	S1	P1	P2	E	F	T
1/4	0.38	2.24	3.94	2.08	NPT 1/4	0.82	0.50	1.12	0.39	0.73	No.10-24UNC
3/8	0.46	2.24	3.94	2.08	NPT 3/8	0.94	0.50	1.12	0.43	0.76	No.10-24UNC
1/2	0.50	2.45	3.94	2.40	NPT 1/2	1.14	0.50	1.12	0.52	0.96	No.10-24UNC
3/4	0.59	2.51	3.94	2.71	NPT 3/4	1.38	0.87	1.37	0.50	0.93	No.10-24UNC
1	0.78	2.63	3.94	3.25	NPT 1	1.69	0.87	1.37	0.62	1.19	No.10-24UNC
1 1/4	1.00	2.81	3.94	3.54	NPT 1 1/4	2.09	0.93	1.50	0.61	1.19	1/4-20UNC
1 1/2	1.26	3.81	5.12	4.13	NPT 1 1/2	2.32	0.93	1.50	0.86	1.45	1/4-20UNC
2	1.50	4.03	5.12	4.61	NPT 2	2.83	0.93	1.50	0.83	1.42	1/4-20UNC

AKUTHWZM-FS
CODE NO. 249

KITZ

MATERIAL LIST

No.	Name of Parts	Materials
1	BODY	A351 Gr. CF8M
2	BODY CAP	A351 Gr. CF8M
3	STEM	A276 TYPE 316
4	BALL	A276 TYPE 316
7	GLAND	A276 TYPE 304
8	GLAND PACKING	FLEXIBLE GRAPHITE
9	HANDLE	A276 TYPE 430 (1)
10	HANDLE NUT	A194 Gr. 8
16	WASHER	A276 TYPE 304
30	BALL SEAT	HYPATITE® PTFE
47	THRUST WASHER	G/F PTFE
A	LATCH LOCK	A276 TYPE 304

NOTE

(1) Plastic covering.
(2) BS 5351 Class 800 (size 1/4 to 1), KITZ standard (size 1 1/4 to 2).
(3) Valve rating 2000WOG (size 1/4 to 1), 1500WOG (size 1 1/4 to 2).

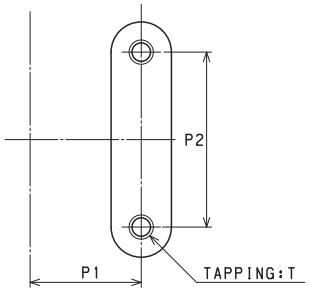

MOUNTING PAD

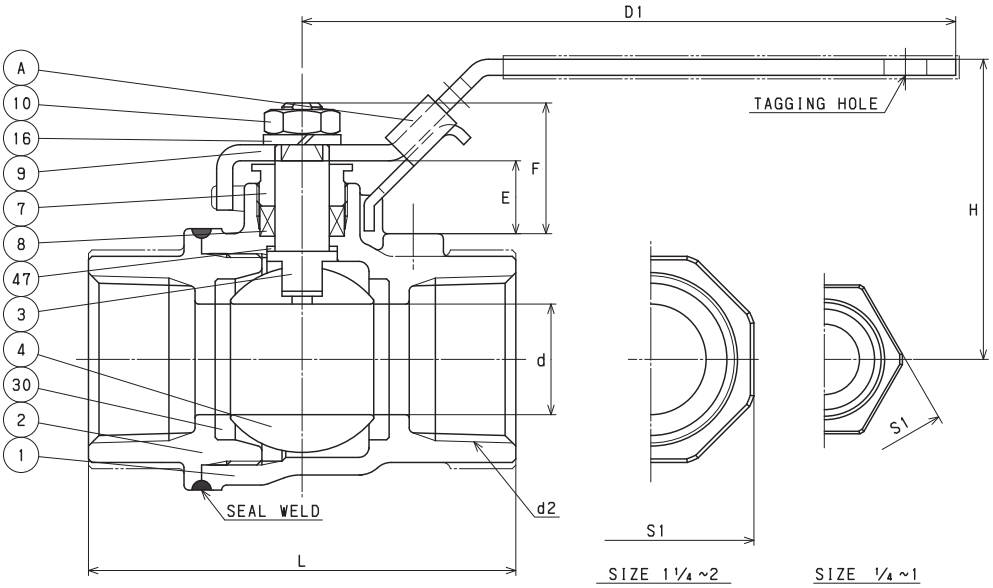

SIZE 1 1/4 ~2

SIZE 1/4 ~1

DIMENSIONS

Unit : inch

Nominal Size	d	H	D1	L	d2	S1	P1	P2	E	F	T
1/4	0.38	1.97	3.94	2.08	NPT 1/4	0.82	0.50	1.12	0.39	0.73	No.10-24UNC
3/8	0.46	1.97	3.94	2.08	NPT 3/8	0.94	0.50	1.12	0.43	0.76	No.10-24UNC
1/2	0.50	2.30	4.53	2.40	NPT 1/2	1.14	0.50	1.12	0.52	0.96	No.10-24UNC
3/4	0.59	2.42	4.53	2.71	NPT 3/4	1.38	0.87	1.37	0.50	0.93	No.10-24UNC
1	0.78	2.49	5.31	3.25	NPT 1	1.69	0.87	1.37	0.62	1.19	No.10-24UNC
1 1/4	1.00	2.65	5.31	3.54	NPT 1 1/4	2.09	0.93	1.50	0.61	1.19	1/4-20UNC
1 1/2	1.26	3.40	6.14	4.13	NPT 1 1/2	2.32	0.93	1.50	0.86	1.45	1/4-20UNC
2	1.50	3.64	7.48	4.61	NPT 2	2.83	0.93	1.50	0.83	1.42	1/4-20UNC

AKUTHWZM-FSO
CODE NO. 249-LOH

KITZ

MATERIAL LIST

No.	Name of Parts	Materials
1	BODY	A351 Gr. CF8M
2	BODY CAP	A351 Gr. CF8M
3	STEM	A276 TYPE 316
4	BALL	A276 TYPE 316
7	GLAND	A276 TYPE 304
8	GLAND PACKING	FLEXIBLE GRAPHITE
9	HANDLE	A276 TYPE 430 (1)
10	HANDLE NUT	A194 Gr. 8
16	WASHER	A276 TYPE 304
30	BALL SEAT	HYPATITE® PTFE
47	THRUST WASHER	G/F PTFE
A	LATCH LOCK	A276 TYPE 304

NOTE

(1) Plastic covering.
(2) BS 5351 Class 800 (size 1/4 to 1), KITZ standard (size 1 1/4 to 2).
(3) Valve rating 2000WOG (size 1/4 to 1), 1500WOG (size 1 1/4 to 2).

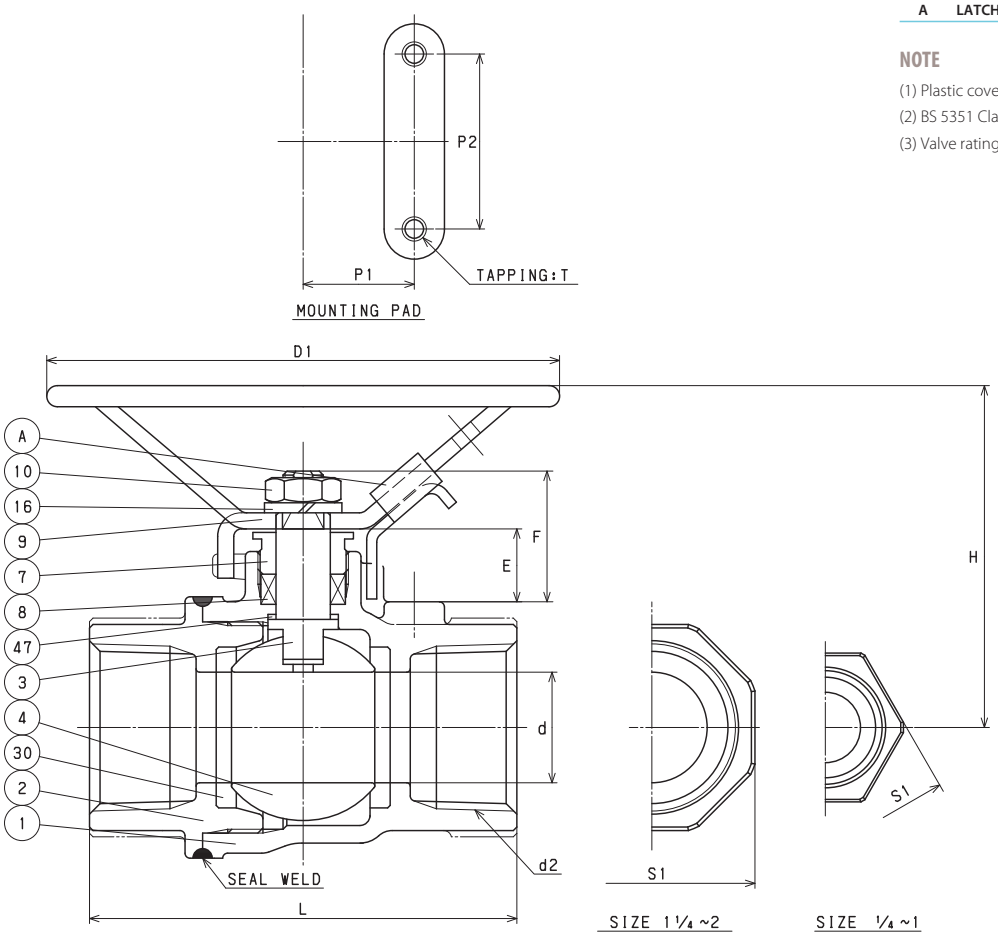

DIMENSIONS

Unit : inch

Nominal Size	d	H	D1	L	d2	S1	P1	P2	E	F	T
1/4	0.38	2.24	3.94	2.08	NPT 1/4	0.82	0.50	1.12	0.39	0.73	No.10-24UNC
3/8	0.46	2.24	3.94	2.08	NPT 3/8	0.94	0.50	1.12	0.43	0.76	No.10-24UNC
1/2	0.50	2.45	3.94	2.40	NPT 1/2	1.14	0.50	1.12	0.52	0.96	No.10-24UNC
3/4	0.59	2.51	3.94	2.71	NPT 3/4	1.38	0.87	1.37	0.50	0.93	No.10-24UNC
1	0.78	2.63	3.94	3.25	NPT 1	1.69	0.87	1.50	0.62	1.19	No.10-24UNC
1 1/4	1.00	2.81	3.94	3.54	NPT 1 1/4	2.09	0.93	1.50	0.61	1.19	1/4-20UNC
1 1/2	1.26	3.81	5.12	4.13	NPT 1 1/2	2.32	0.93	1.50	0.86	1.45	1/4-20UNC
2	1.50	4.03	5.12	4.61	NPT 2	2.83	0.93	1.50	0.83	1.42	1/4-20UNC

AKUTKM
CODE NO. 52

KITZ

MATERIAL LIST

No.	Name of Parts	Materials
1	BODY	A351 Gr. CF8M
3	STEM	A276 TYPE 316
4	BALL	A276 TYPE 316
7	GLAND	A276 TYPE 316
8	GLAND PACKING	G/F + PTFE
9	HANDLE	A276 TYPE 430 (1)
10	SELF LOCKING NUT	A276 TYPE 304
16	SPRING WASHER	A276 TYPE 304
29	INSERT	A276 TYPE 316 or A351 Gr. CF8M
30	BALL SEAT	G/F + PTFE
43	SPRING	A167 TYPE 304
47	THRUST WASHER	REINFORCED PTFE

NOTE

(1) Plastic covering.

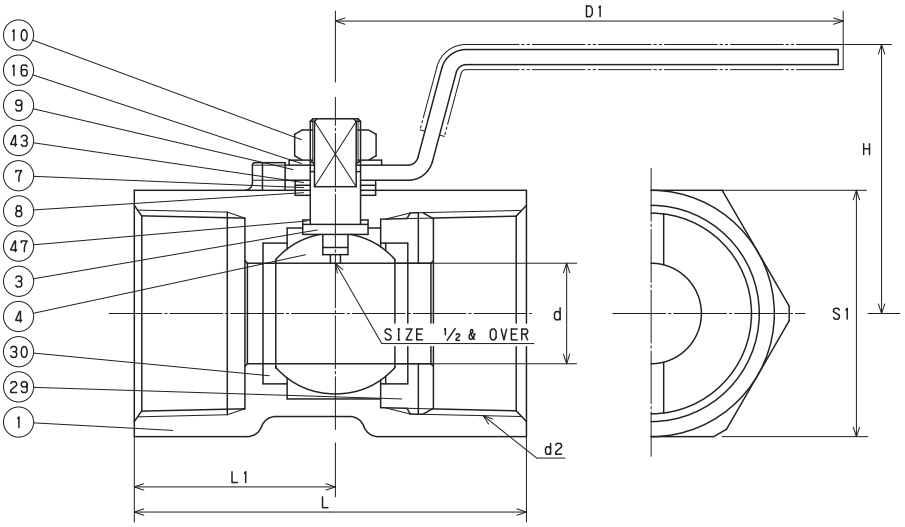

DIMENSIONS

Unit : inch

Nominal Size	d	H	D1	L	d2	S1	L1
1/4	0.18	1.22	2.36	1.54	NPT 1/4	0.67	0.75
3/8	0.27	1.42	2.76	1.73	NPT 3/8	0.83	0.83
1/2	0.36	1.61	3.35	2.22	NPT 1/2	0.99	1.08
3/4	0.49	1.73	3.35	2.32	NPT 3/4	1.26	1.18
1	0.63	1.89	3.94	2.80	NPT 1	1.50	1.42
1 1/4	0.79	2.13	3.94	3.07	NPT 1 1/4	1.93	1.57
1 1/2	0.96	2.56	4.92	3.27	NPT 1 1/2	2.09	1.67
2	1.26	2.83	4.92	3.94	NPT 2	2.56	2.01

AKUTHM
CODE NO. 53

KITZ

MATERIAL LIST

No.	Name of Parts	Materials
1	BODY	A351 Gr. CF8M
2	BODY CAP	A351 Gr. CF8M
3	STEM	A276 TYPE 316 (2)
4	BALL	A276 TYPE 316 or A351 Gr. CF8M
7	GLAND	A276 TYPE 316
8	GLAND PACKING	PTFE
9	HANDLE	A276 TYPE 430 (1)
10	WHEEL NUT	A194 Gr. 8
16	WASHER	A276 TYPE 304 (SIZE 3/4 & OVER)
19	GASKET	PTFE
30	BALL SEAT	PTFE
34	GLAND NUT	STAINLESS STEEL
43	CONED DISC SPRINGS	STAINLESS STEEL
47	THRUST WASHER	G/F PTFE

NOTE

(1) Plastic covering.
(2) Cr plating.

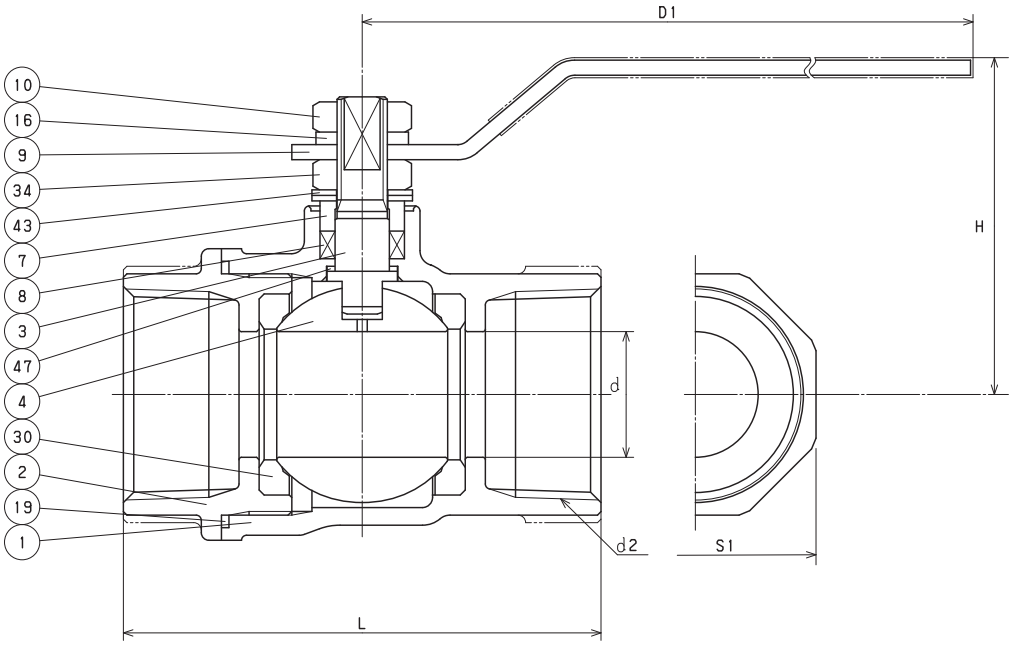

DIMENSIONS

Unit : inch

Nominal Size	d	H	D1	L	d2	S1
1/2	0.39	1.85	3.94	2.36	NPT 1/2	1.03
3/4	0.59	2.09	3.94	2.76	NPT 3/4	1.26
1	0.79	2.48	5.12	3.15	NPT 1	1.54
1 1/4	0.98	2.64	5.12	3.74	NPT 1 1/4	1.89
1 1/2	1.26	3.07	5.91	4.25	NPT 1 1/2	2.13
2	1.57	3.31	5.91	4.88	NPT 2	2.72

AKU3TFZM-O
CODE NO. 327F-LOH

KITZ

MATERIAL LIST

No.	Name of Parts	Materials
1	BODY	A351 Gr.CF8M
2	CAP	A351 Gr.CF8M
3	STEM	A276 TYPE316
4	BALL	A276 TYPE316 or A351 Gr,CF8M
7	GLAND	A276 TYPE316
8	GLAND PACKING	PTFE
9	HANDLE	A276 TYPE430(1)
10	HANDLE NUT	STAINLESS STEEL
16A	WASHER	STAINLESS STEEL
16B	NAME PLATE	STAINLESS STEEL
19	GASKET	PTFE
30	BALL SEAT	HYPATITE® PTFE
34	GLAND NUT	STAINLESS STEEL
35	CAP BOLT	STAINLESS STEEL
40	LOCK PLATE	STAINLESS STEEL
43	CONED DISC SPTING	STAINLESS STEEL
47	THRUST WASHER	PTFE(2)
126	STOPPER PIN	A276 TYPE304
A	LATCH LOCK	STAINLESS STEEL

NOTE

(1) Plastic covering.

(2) Stem—to-body grounding optional available.

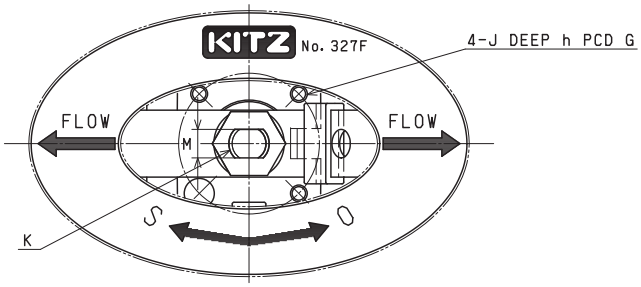

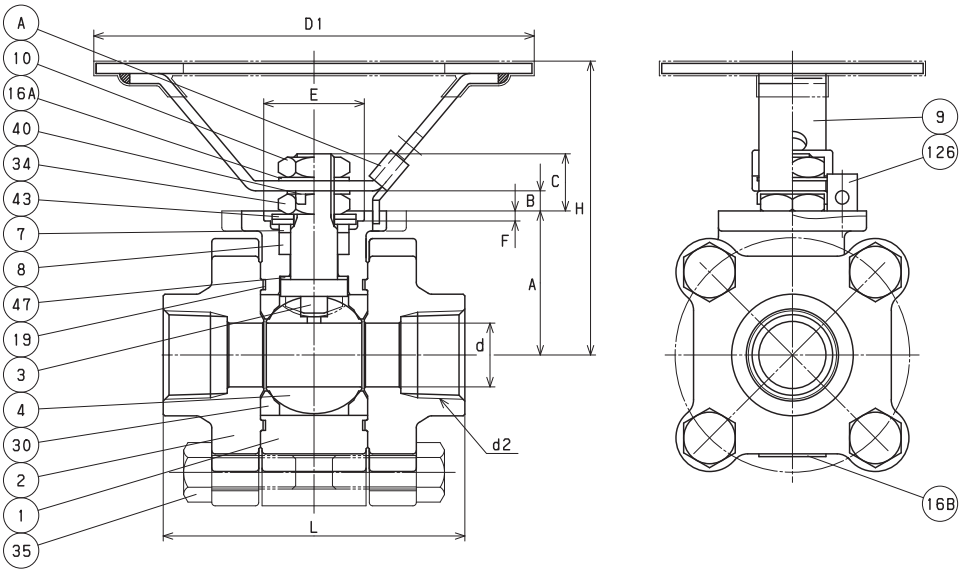

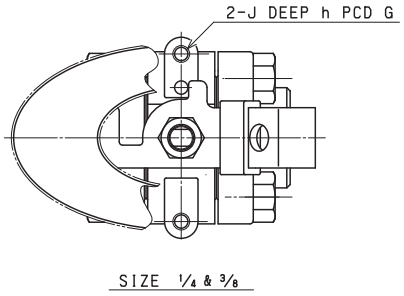

DIMENSIONS

Unit : inch

Nominal Size						Mounting Dimensions for Actuator										
in.	d	H	D1	L	d2	A	B	C	E	F	G	J	h	K	M	ISO 5211 Flange Type
1/4	0.39	2.48	3.94	2.48	NPT 1/4	1.04	0.08	0.41	—	—	1.97	1/4-20UNC	0.28	M8	0.20	—
3/8	0.39	2.48	3.94	2.48	NPT 3/8	1.04	0.08	0.41	—	—	1.97	1/4-20UNC	0.28	M8	0.20	—
1/2	0.55	3.07	5.12	2.80	NPT 1/2	1.38	0.17	0.56	0.98	0.12	1.42	1/4-20UNC	0.20	M10	0.24	F03
3/4	0.75	3.43	5.12	3.54	NPT 3/4	1.69	0.20	0.67	1.18	0.12	1.65	1/4-20UNC	0.24	M12	0.34	F04
1	0.94	3.35	7.09	4.06	NPT 1	1.73	0.53	1.15	1.18	0.12	1.65	1/4-20UNC	0.32	M14	0.39	F04
1 1/4	1.18	3.58	7.09	4.33	NPT 1 1/4	1.95	0.53	1.07	1.18	0.12	1.65	1/4-20UNC	0.32	M14	0.39	F04
1 1/2	1.50	3.94	7.09	5.00	NPT 1 1/2	2.24	0.46	1.14	1.38	0.12	1.97	1/4-20UNC	0.39	M16	0.39	F05

AKU3TFZM
CODE NO. 327F

MATERIAL LIST

No.	Name of Parts	Materials
1	BODY	A351 Gr.CF8M
2	CAP	A351 Gr.CF8M
3	STEM	A276 TYPE316
4	BALL	A276 TYPE316 or A351 Gr,CF8M
7	GLAND	A276 TYPE316
8	GLAND PACKING	PTFE
9	HANDLE	A276 TYPE430(1)
10	HANDLE NUT	STAINLESS STEEL
16A	WASHER	STAINLESS STEEL
16B	NAME PLATE	STAINLESS STEEL
19	GASKET	PTFE
30	BALL SEAT	HYPATITE® PTFE
34	GLAND NUT	STAINLESS STEEL
35	CAP BOLT	STAINLESS STEEL
40	LOCK PLATE	STAINLESS STEEL
43	CONED DISC SPTING	STAINLESS STEEL
47	THRUST WASHER	PTFE(2)
126	STOPPER PIN	A276 TYPE304
A	LATCH LOCK	STAINLESS STEEL

NOTE

(1) Plastic covering.

(2) Stem—to-body grounding optional available.

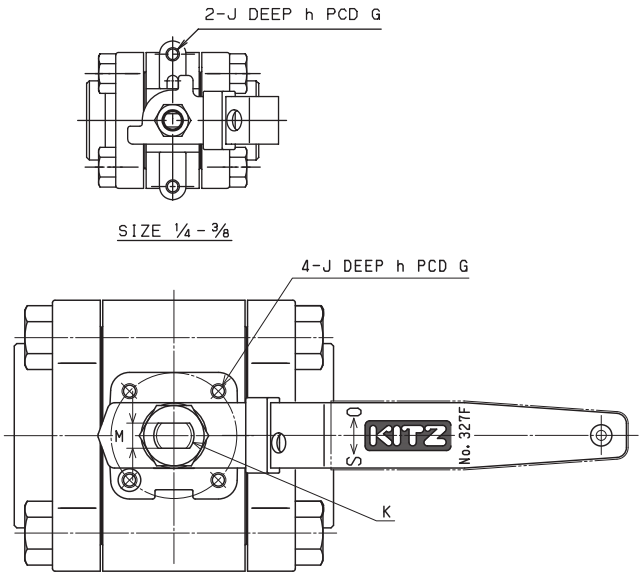

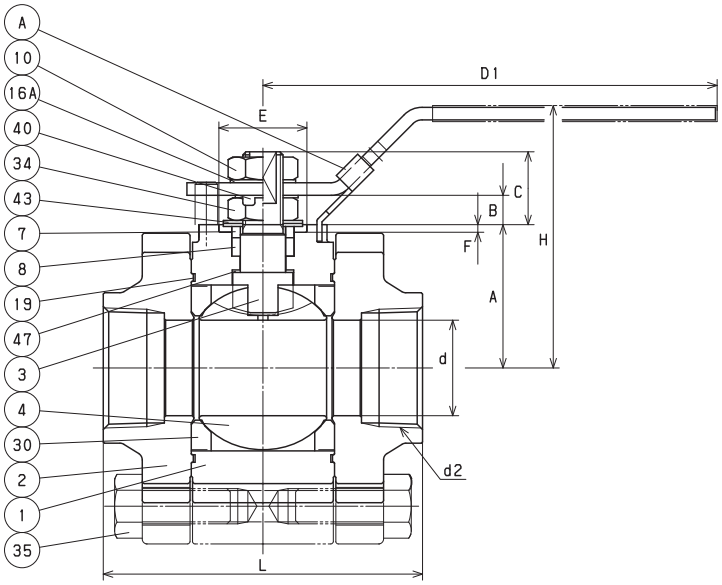

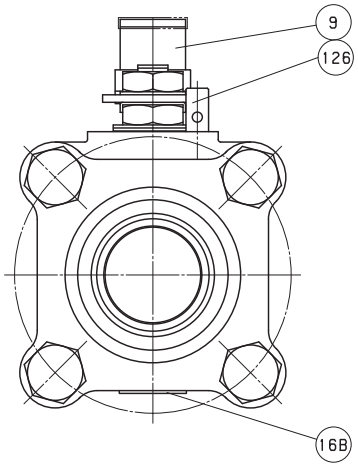

DIMENSIONS

Unit : inch

Nominal Size						Mounting Dimensions for Actuator										
in.	d	H	D1	L	d2	A	B	C	E	F	G	J	h	K	M	ISO 5211 Flange Type
1/4	0.39	1.89	4.72	2.48	NPT 1/4	1.04	0.08	0.41	—	—	1.97	1/4-20UNC	0.28	M8	0.20	—
3/8	0.39	1.89	4.72	2.48	NPT 3/8	1.04	0.08	0.41	—	—	1.97	1/4-20UNC	0.28	M8	0.20	—
1/2	0.55	2.36	5.12	2.80	NPT 1/2	1.38	0.17	0.56	0.98	0.12	1.42	1/4-20UNC	0.20	M10	0.24	F03
3/4	0.75	2.68	5.12	3.54	NPT 3/4	1.69	0.20	0.67	1.18	0.12	1.65	1/4-20UNC	0.24	M12	0.34	F04
1	0.94	3.23	5.91	4.06	NPT 1	1.73	0.53	1.15	1.18	0.12	1.65	1/4-20UNC	0.32	M14	0.39	F04
1 1/4	1.18	3.46	5.91	4.33	NPT 1 1/4	1.95	0.53	1.07	1.18	0.12	1.65	1/4-20UNC	0.32	M14	0.39	F04
1 1/2	1.50	4.09	7.09	5.00	NPT 1 1/2	2.24	0.46	1.14	1.38	0.12	1.97	1/4-20UNC	0.39	M16	0.39	F05

AKU3TFZM
CODE NO. 327F

MATERIAL LIST

No.	Name of Parts	Materials
1	BODY	A351 Gr. CF8M
2	CAP	A351 Gr. CF8M
3	STEM	A276 TYPE 316
4	BALL	A351 Gr. CF8M
7	GLAND	A351 Gr. CF8
8	GLAND PACKING	PTFE
9	HANDLE	DUCTILE IRON
16	HANDLE PLATE	STAINLESS STEEL
19	GASKET	PTFE
30	BALL SEAT	HYPATITE® PTFE
35	CAP BOLT	A193 Gr. B8
36	GLAND BOLT	A193 Gr. B8
40	KEY LOCK PLATE	STAINLESS STEEL
47	THRUST WASHER	PTFE (1)
48	SNAP RING	STAINLESS STEEL
49	STOPPER	STAINLESS STEEL
123	HANDLE BOLT	STAINLESS STEEL
124	SPRING & PIN	A313 & A276 TYPE 316
126	STOPPER PIN	STAINLESS STEEL

NOTE

(1) Stem–to-body grounding optional available.

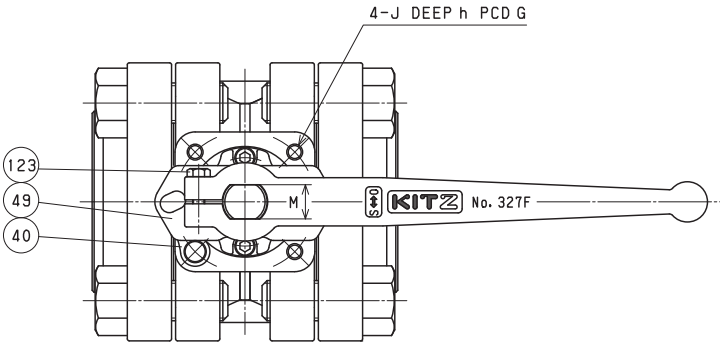

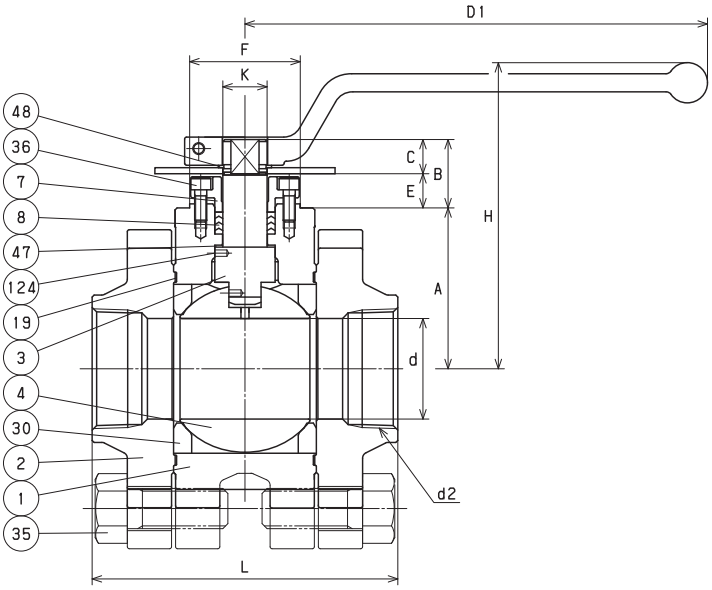

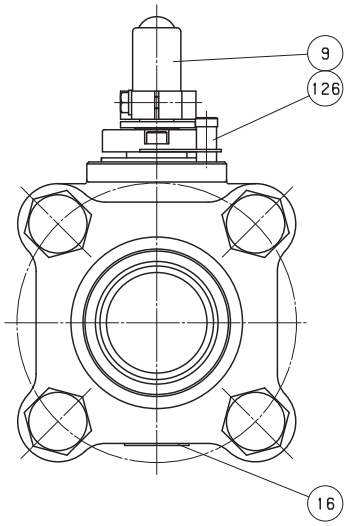

DIMENSIONS

Unit : inch

Nominal Size						Mounting Dimensions for Actuator										
in.	d	H	D1	L	d2	A	B	C	E	F	K	G	J	h	M	ISO 5211 Flange Type
2	1.97	5.98	9.06	5.98	NPT 2	3.15	1.34	0.67	0.67	2.17	0.87	2.76	5/16-18UNC	0.59	0.67	F07

AKU3TFZM-FSO
CODE NO. 329F-LOH

MATERIAL LIST

No.	Name of Parts	Materials
1	BODY	A351 Gr.CF8M
2	CAP	A351 Gr.CF8M
3	STEM	A276 TYPE316
4	BALL	A276 TYPE316 or A351 Gr,CF8M
7	GLAND	A276 TYPE316
8A	GLAND PACKING	FLEXIBLE GRAFITE
8B	SPACER PACKING	G/F PTFE
9	HANDLE	A276 TYPE430(1)
10	HANDLE NUT	STAINLESS STEEL
16A	WASHER	STAINLESS STEEL
16B	NAME PLATE	STAINLESS STEEL
19	GASKET	PTFE
30	BALL SEAT	HYPATITE® PTFE
34	GLAND NUT	STAINLESS STEEL
35	CAP BOLT	STAINLESS STEEL
40	LOCK PLATE	STAINLESS STEEL
43	CONED DISC SPTING	STAINLESS STEEL
47	THRUST WASHER	C/F PTFE(2) (25%CARBON FILLED)
126	STOPPER PIN	A276 TYPE304
A	LATCH LOCK	STAINLESS STEEL

NOTE

(1) Plastic covering.

(2) All valves have an anti-static thrust washer insuring positive conductivity between body and stem.

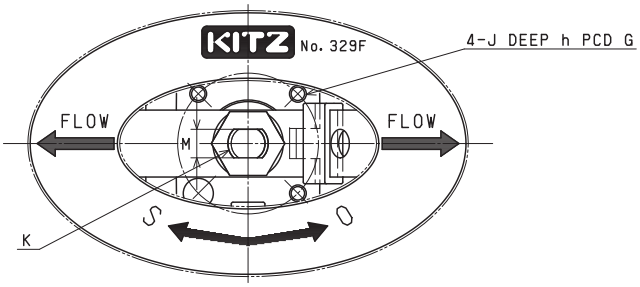

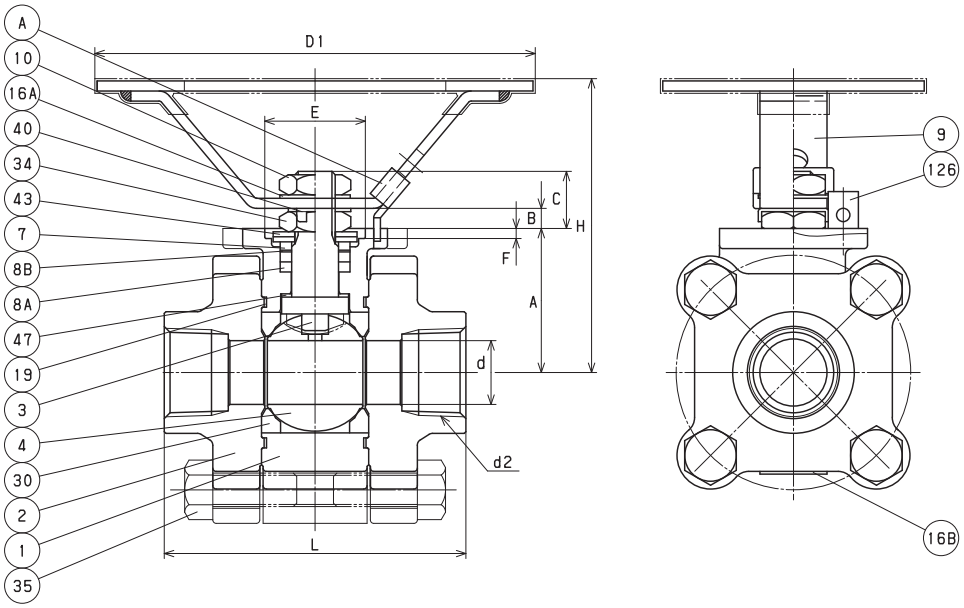

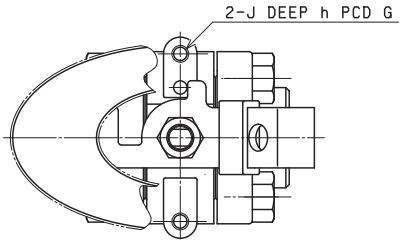

SIZE 1/4 & 3/8

DIMENSIONS

Unit : inch

Nominal Size						Mounting Dimensions for Actuator										
in.	d	H	D1	L	d2	A	B	C	E	F	G	J	h	K	M	ISO 5211 Flange Type
1/4	0.39	2.48	3.94	2.48	NPT 1/4	1.04	0.08	0.41	—	—	1.97	1/4-20UNC	0.28	M8	0.20	—
3/8	0.39	2.48	3.94	2.48	NPT 3/8	1.04	0.08	0.41	—	—	1.97	1/4-20UNC	0.28	M8	0.20	—
1/2	0.55	3.07	5.12	2.80	NPT 1/2	1.38	0.17	0.56	0.98	0.12	1.42	1/4-20UNC	0.20	M10	0.24	F03
3/4	0.75	3.43	5.12	3.54	NPT 3/4	1.69	0.20	0.67	1.18	0.12	1.65	1/4-20UNC	0.24	M12	0.34	F04
1	0.94	3.35	7.09	4.06	NPT 1	1.73	0.53	1.15	1.18	0.12	1.65	1/4-20UNC	0.32	M14	0.39	F04
1 1/4	1.18	3.58	7.09	4.33	NPT 1 1/4	1.95	0.53	1.07	1.18	0.12	1.65	1/4-20UNC	0.32	M14	0.39	F04
1 1/2	1.50	3.94	7.09	5.00	NPT 1 1/2	2.24	0.46	1.14	1.38	0.12	1.97	1/4-20UNC	0.39	M16	0.39	F05

AKU3TFZM-FS
CODE NO. 329F

KITZ

MATERIAL LIST

No.	Name of Parts	Materials
1	BODY	A351 Gr.CF8M
2	CAP	A351 Gr.CF8M
3	STEM	A276 TYPE316
4	BALL	A276 TYPE316 or A351 Gr,CF8M
7	GLAND	A276 TYPE316
8A	GLAND PACKING	FLEXIBLE GRAFITE
8B	SPACER PACKING	G/F PTFE
9	HANDLE	A276 TYPE430(1)
10	HANDLE NUT	STAINLESS STEEL
16A	WASHER	STAINLESS STEEL
16B	NAME PLATE	STAINLESS STEEL
19	GASKET	PTFE
30	BALL SEAT	HYPATITE® PTFE
34	GLAND NUT	STAINLESS STEEL
35	CAP BOLT	STAINLESS STEEL
40	LOCK PLATE	STAINLESS STEEL
43	CONED DISC SPTING	STAINLESS STEEL
47	THRUST WASHER	C/F PTFE(2) (25%CARBON FILLED)
126	STOPPER PIN	A276 TYPE304
A	LATCH LOCK	STAINLESS STEEL

NOTE

(1) Plastic covering.

(2) All valves have an anti-static thrust washer insuring positive conductivity between body and stem.

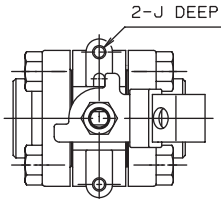

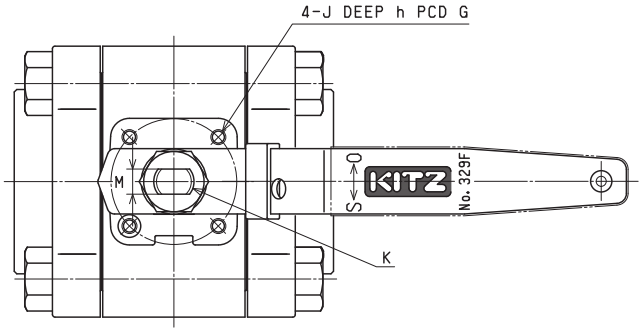

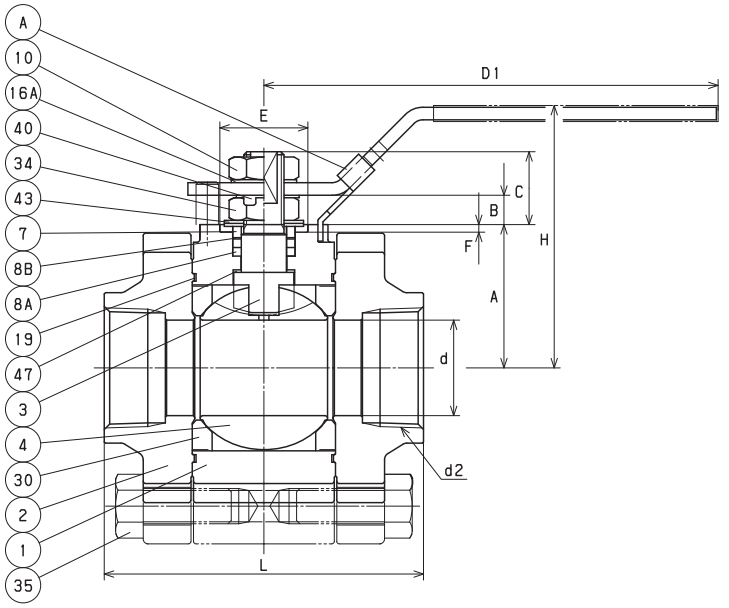

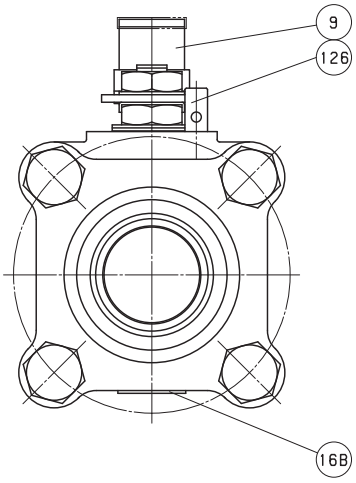

DIMENSIONS

Unit : inch

Nominal Size						Mounting Dimensions for Actuator										
in.	d	H	D1	L	d2	A	B	C	E	F	G	J	h	K	M	ISO 5211 Flange Type
1/4	0.39	1.89	4.72	2.48	NPT 1/4	1.04	0.08	0.41	—	—	1.97	1/4-20UNC	0.28	M8	0.20	—
3/8	0.39	1.89	4.72	2.48	NPT 3/8	1.04	0.08	0.41	—	—	1.97	1/4-20UNC	0.28	M8	0.20	—
1/2	0.55	2.36	5.12	2.80	NPT 1/2	1.38	0.17	0.56	0.98	0.12	1.42	1/4-20UNC	0.20	M10	0.24	F03
3/4	0.75	2.68	5.12	3.54	NPT 3/4	1.69	0.20	0.67	1.18	0.12	1.65	1/4-20UNC	0.24	M12	0.34	F04
1	0.94	3.23	5.91	4.06	NPT 1	1.73	0.53	1.15	1.18	0.12	1.65	1/4-20UNC	0.32	M14	0.39	F04
1 1/4	1.18	3.46	5.91	4.33	NPT 1 1/4	1.95	0.53	1.07	1.18	0.12	1.65	1/4-20UNC	0.32	M14	0.39	F04
1 1/2	1.50	4.09	7.09	5.00	NPT 1 1/2	2.24	0.46	1.14	1.38	0.12	1.97	1/4-20UNC	0.39	M16	0.39	F05

AKU3TFZM-FS
CODE NO. 329F

KITZ

MATERIAL LIST

No.	Name of Parts	Materials
1	BODY	A351 Gr. CF8M
2	CAP	A351 Gr. CF8M
3	STEM	A276 TYPE 316
4	BALL	A351 Gr. CF8M
7	GLAND	A351 Gr. CF8
8 A	GLAND PACKING	FLEXIBLE GRAPHITE
8 B	SPACER PACKING	G/F PTFE
9	HANDLE	DUCTILE IRON
16	NAME PLATE	STAINLESS STEEL
19	GASKET	(2)
30	BALL SEAT	HYPATITE® PTFE
35	CAP BOLT	A193 Gr. B8
36	GLAND BOLT	A193 Gr. B8
40	KEY LOCK PLATE	STAINLESS STEEL
47	THRUST WASHER	25% CARBON FILLED PTFE (1)
48	SNAP RING	STAINLESS STEEL
49	STOPPER	STAINLESS STEEL
123	HANDLE BOLT	STAINLESS STEEL
124	SPRING & PIN	A313 & A276 TYPE 316
126	STOPPER PIN	STAINLESS STEEL

NOTE

(1) All valves have an anti-static thrust washer insuring positive conductivity between body and stem.

(2) Flexible graphite with stainless foil insert.

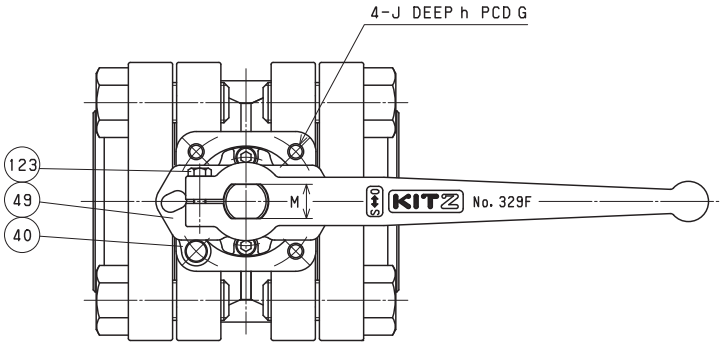

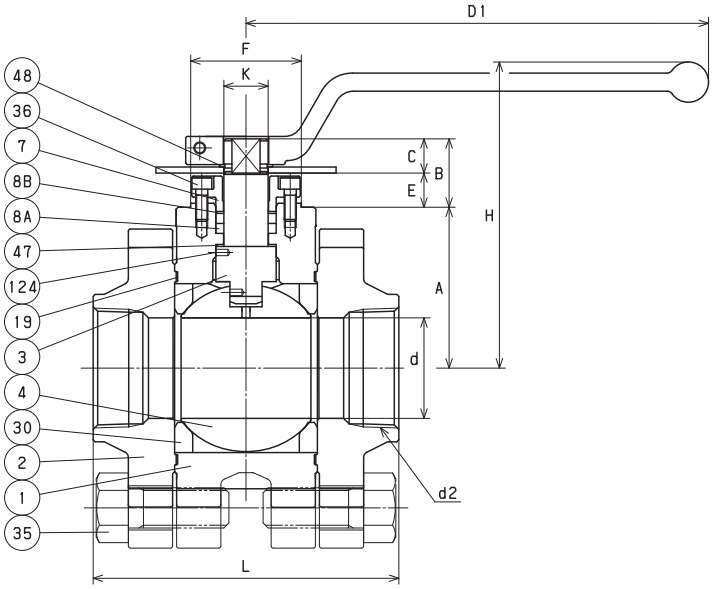

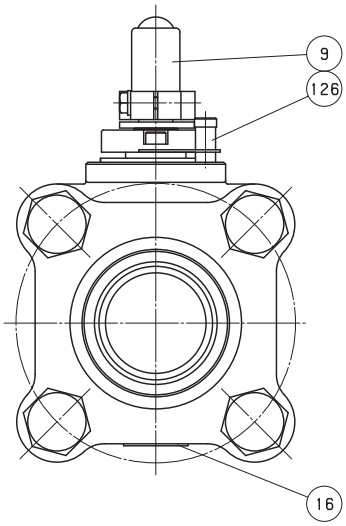

DIMENSIONS

Unit : inch

Nominal Size						Mounting Dimensions for Actuator										
in.	d	H	D1	L	d2	A	B	C	E	F	K	G	J	h	M	ISO 5211 Flange Type
2	1.97	5.98	9.06	5.98	NPT 2	3.15	1.34	0.67	0.67	2.17	0.87	2.76	5/16-18UNC	0.59	0.67	F07

AKU3THZM-O
CODE NO. 327-LOH

KITZ

MATERIAL LIST

No.	Name of Parts	Materials
1	BODY	A351 Gr.CF8M
2	CAP	A351 Gr.CF8M
3	STEM	A276 TYPE316
4	BALL	A276 TYPE316 or A351 Gr,CF8M
7	GLAND	A276 TYPE316
8	GLAND PACKING	PITE
9	HANDLE	A276 TYPE430(1)
10	HANDLE NUT	STAINLESS STEEL
16A	WASHER	STAINLESS STEEL
16B	NAME PLATE	STAINLESS STEEL
19	GASKET	PTFE
30	BALL SEAT	HYPATITE® PTFE
34	GLAND NUT	STAINLESS STEEL
35	CAP BOLT	STAINLESS STEEL
40	LOCK PLATE	STAINLESS STEEL
43	CONED DISC SPTING	STAINLESS STEEL
47	THRUST WASHER	PTFE(2)
126	STOPPER PIN	A276 TYPE304
A	LATCH LOCK	STAINLESS STEEL

NOTE

(1) Plastic covering.

(2) Stem—to-body grounding optional available.

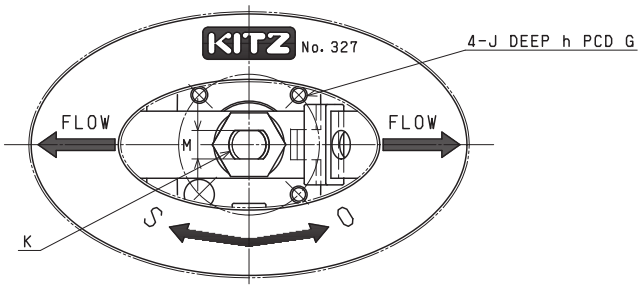

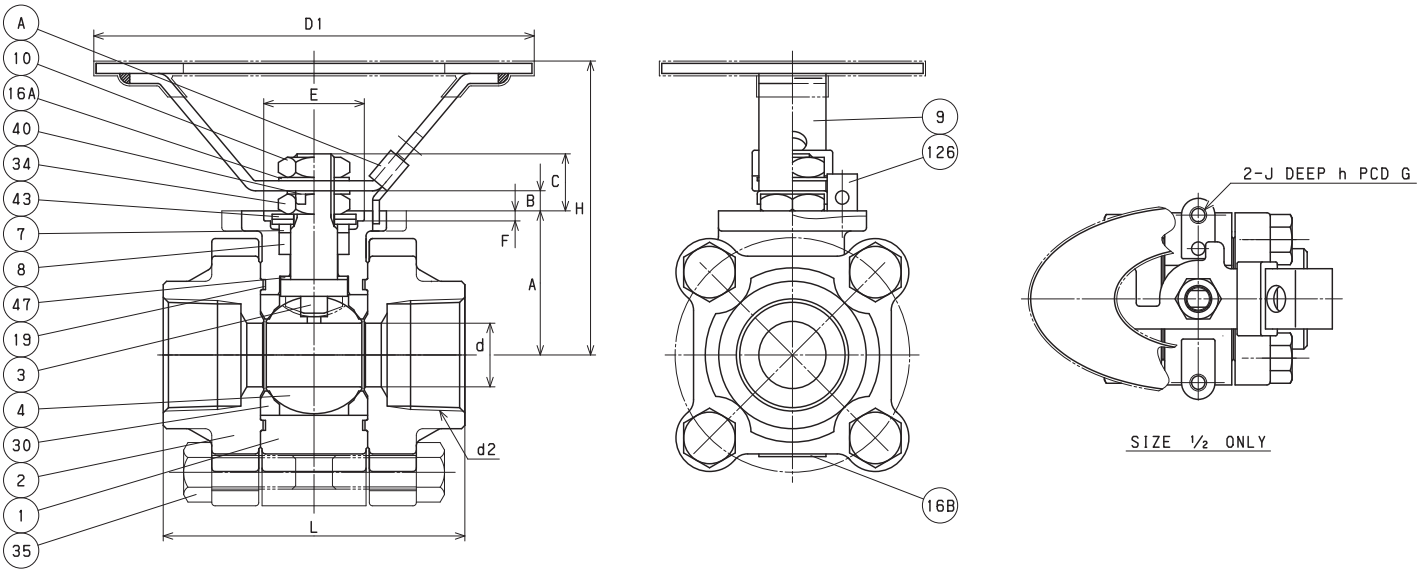

DIMENSIONS

Unit : inch

Nominal Size						Mounting Dimensions for Actuator										
in.	d	H	D1	L	d2	A	B	C	E	F	G	J	h	K	M	ISO 5211 Flange Type
1/2	0.39	2.48	3.94	2.48	NPT 1/2	1.04	0.08	0.41	—	—	1.97	1/4-20UNC	0.28	M8	0.20	—
3/4	0.55	3.07	5.12	2.80	NPT 3/4	1.38	0.17	0.56	0.98	0.12	1.42	1/4-20UNC	0.20	M10	0.24	F03
1	0.75	3.43	5.12	3.54	NPT 1	1.69	0.20	0.67	1.18	0.12	1.65	1/4-20UNC	0.24	M12	0.34	F04
1 1/4	0.94	3.35	7.09	4.06	NPT 1 1/4	1.73	0.53	1.15	1.18	0.12	1.65	1/4-20UNC	0.32	M14	0.39	F04
1 1/2	1.18	3.58	7.09	4.33	NPT 1 1/2	1.95	0.53	1.07	1.18	0.12	1.65	1/4-20UNC	0.33	M14	0.39	F04
2	1.50	3.94	7.09	5.00	NPT 2	2.24	0.46	1.14	1.38	0.12	1.97	1/4-20UNC	0.39	M16	0.39	F05

AKU3THZM
CODE NO. 327

MATERIAL LIST

No.	Name of Parts	Materials
1	BODY	A351 Gr.CF8M
2	CAP	A351 Gr.CF8M
3	STEM	A276 TYPE316
4	BALL	A276 TYPE316 or A351 Gr,CF8M
7	GLAND	A276 TYPE316
8	GLAND PACKING	PITE
9	HANDLE	A276 TYPE430(1)
10	HANDLE NUT	STAINLESS STEEL
16A	WASHER	STAINLESS STEEL
16B	NAME PLATE	STAINLESS STEEL
19	GASKET	PTFE
30	BALL SEAT	HYPATITE® PTFE
34	GLAND NUT	STAINLESS STEEL
35	CAP BOLT	STAINLESS STEEL
40	LOCK PLATE	STAINLESS STEEL
43	CONED DISC SPTING	STAINLESS STEEL
47	THRUST WASHER	C/F PTFE(2) (25%CARBON FILLED)
126	STOPPER PIN	A276 TYPE304
A	LATCH LOCK	STAINLESS STEEL

NOTE

(1) Plastic covering.

(2) Stem—to-body grounding optional available.

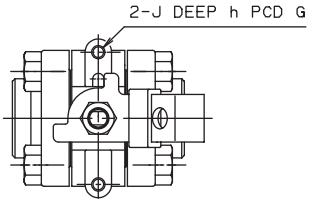

SIZE ½ ONLY

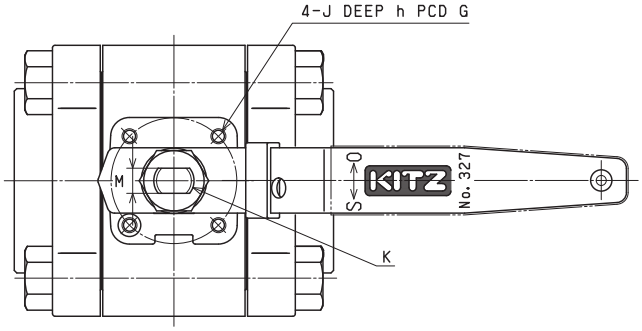

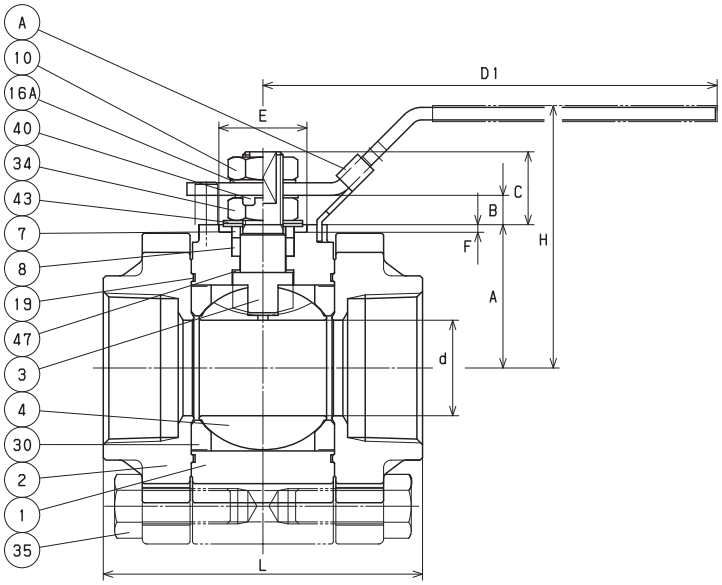

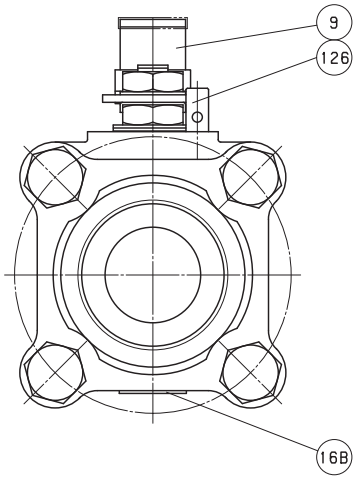

DIMENSIONS

Unit : inch

Nominal Size						Mounting Dimensions for Actuator										
in.	d	H	D1	L	d2	A	B	C	E	F	G	J	h	K	M	ISO 5211 Flange Type
1/2	0.39	1.89	4.72	2.48	NPT 1/2	1.04	0.08	0.41	—	—	1.97	1/4-20UNC	0.28	M8	0.20	—
3/4	0.55	2.36	5.12	2.80	NPT 3/4	1.38	0.17	0.56	0.98	0.12	1.42	1/4-20UNC	0.20	M10	0.24	F03
1	0.75	2.68	5.12	3.54	NPT 1	1.69	0.20	0.67	1.18	0.12	1.65	1/4-20UNC	0.24	M12	0.34	F04
1 1/4	0.94	3.23	5.91	4.06	NPT 1 1/4	1.73	0.53	1.15	1.18	0.12	1.65	1/4-20UNC	0.32	M14	0.39	F04
1 1/2	1.18	3.46	5.91	4.33	NPT 1 1/2	1.95	0.53	1.07	1.18	0.12	1.65	1/4-20UNC	0.33	M14	0.39	F04
2	1.50	4.09	7.09	5.00	NPT 2	2.24	0.46	1.14	1.38	0.12	1.97	1/4-20UNC	0.39	M16	0.39	F05

AKU3THZM
CODE NO. 327

KITZ

MATERIAL LIST

No.	Name of Parts	Materials
1	BODY	A351 Gr. CF8M
2	CAP	A351 Gr. CF8M
3	STEM	A276 TYPE 316
4	BALL	A351 Gr. CF8M
7	GLAND	A351 Gr. CF8
8	GLAND PACKING	PTFE
9	HANDLE	DUCTILE IRON
16	NAME PLATE	STAINLESS STEEL
19	GASKET	PTFE
30	BALL SEAT	HYPATITE® PTFE
35	CAP BOLT	A193 Gr. B8
36	GLAND BOLT	A193 Gr. B8
40	KEY LOCK PLATE	STAINLESS STEEL
47	THRUST WASHER	PTFE (1)
48	SNAP RING	STAINLESS STEEL
49	STOPPER	STAINLESS STEEL
123	HANDLE BOLT	STAINLESS STEEL
124	SPRING & PIN	A313 & A276 TYPE 316
126	STOPPER PIN	STAINLESS STEEL

NOTE

(1) Stem−to-body grounding optional available.

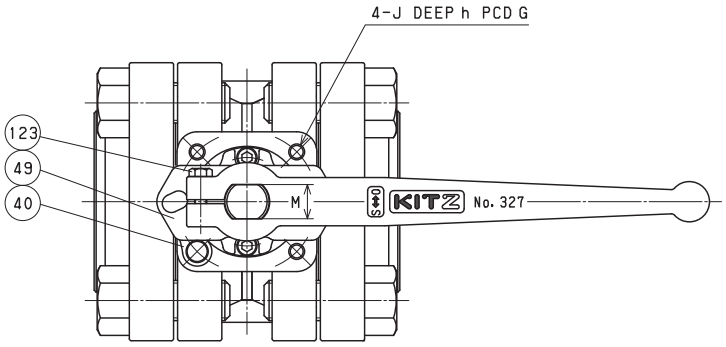

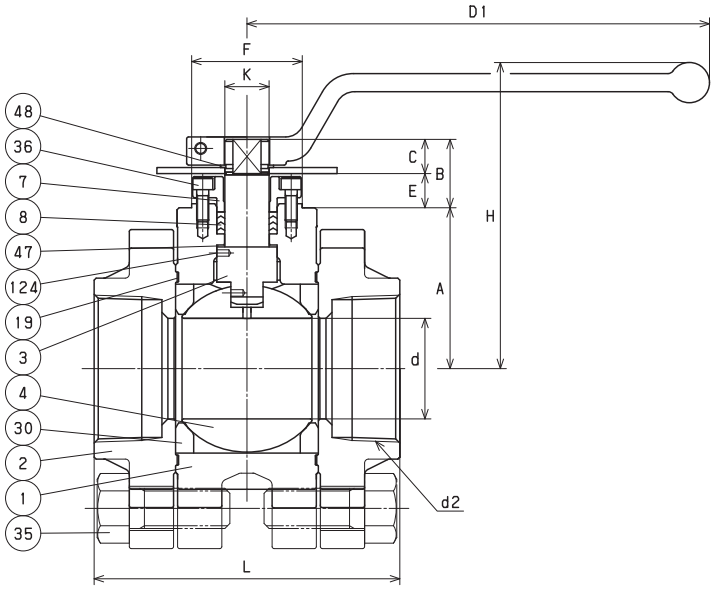

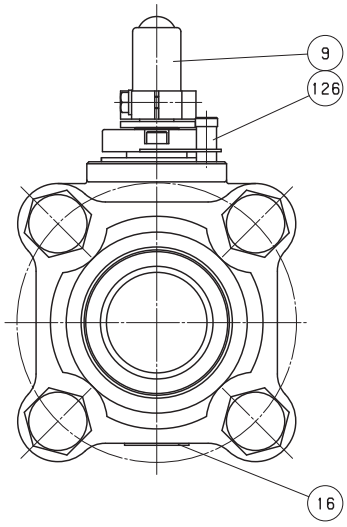

DIMENSIONS

Unit : inch

Nominal Size						Mounting Dimensions for Actuator										
in.	d	H	D1	L	d2	A	B	C	E	F	K	G	J	h	M	ISO 5211 Flange Type
2 1/2	1.97	5.98	9.06	5.98	NPT 2 1/2	3.15	1.34	0.67	0.67	2.17	0.87	2.76	5/16-18UNC	0.59	0.67	F07

AKU3THZM-FSO
CODE NO. 329-LOH

MATERIAL LIST

No.	Name of Parts	Materials
1	BODY	A351 Gr.CF8M
2	CAP	A351 Gr.CF8M
3	STEM	A276 TYPE316
4	BALL	A276 TYPE316 or A351 Gr,CF8M
7	GLAND	A276 TYPE316
8A	GLAND PACKING	FLEXIBLE GRAFITE
8B	SPACER PACKING	G/F PTFE
9	HANDLE	A276 TYPE430(1)
10	HANDLE NUT	STAINLESS STEEL
16A	WASHER	STAINLESS STEEL
16B	NAME PLATE	STAINLESS STEEL
19	GASKET	PTFE
30	BALL SEAT	HYPATITE® PTFE
34	GLAND NUT	STAINLESS STEEL
35	CAP BOLT	STAINLESS STEEL
40	LOCK PLATE	STAINLESS STEEL
43	CONED DISC SPTING	STAINLESS STEEL
47	THRUST WASHER	C/F PTFE(2) (25%CARBON FILLED)
126	STOPPER PIN	A276 TYPE304
A	LATCH LOCK	STAINLESS STEEL

NOTE

(1) Plastic covering.

(2) All valves have an anti-static thrust washer insuring positive conductivity between body and stem.

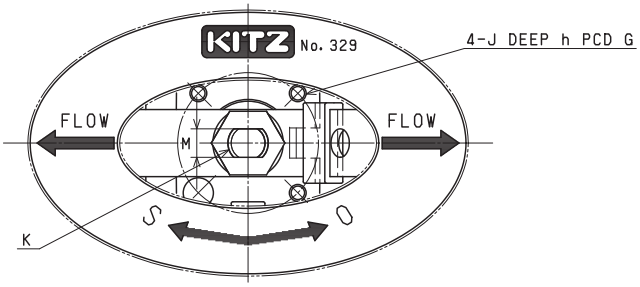

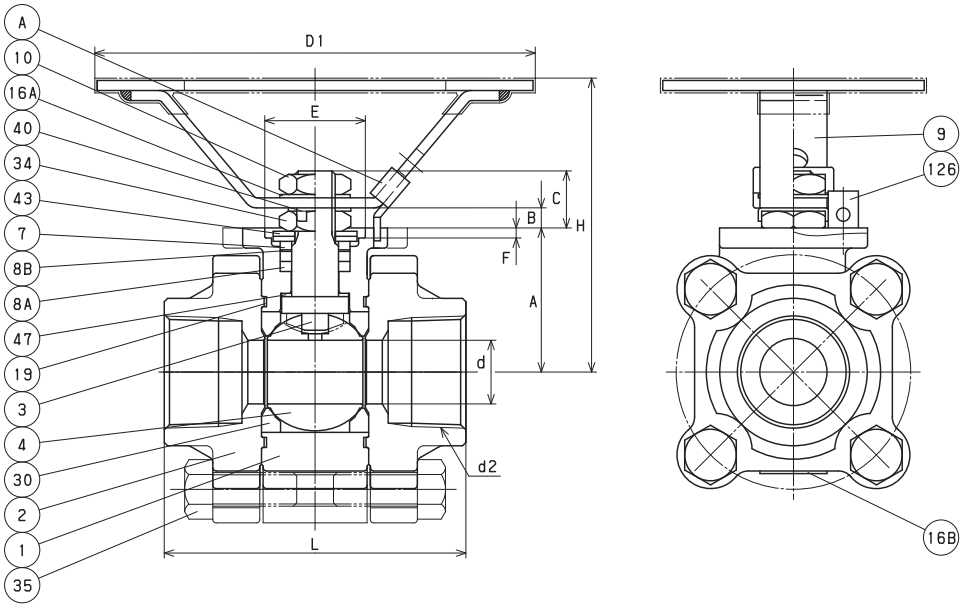

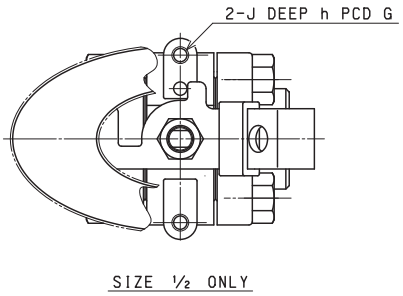

DIMENSIONS

Unit : inch

Nominal Size						Mounting Dimensions for Actuator										
in.	d	H	D1	L	d2	A	B	C	E	F	G	J	h	K	M	ISO 5211 Flange Type
1/2	0.39	2.48	3.94	2.48	NPT 1/2	1.04	0.08	0.41	—	—	1.97	1/4-20UNC	0.28	M8	0.20	—
3/4	0.55	3.07	5.12	2.80	NPT 3/4	1.38	0.17	0.56	0.98	0.12	1.42	1/4-20UNC	0.20	M10	0.24	F03
1	0.75	3.43	5.12	3.54	NPT 1	1.69	0.20	0.67	1.18	0.12	1.65	1/4-20UNC	0.24	M12	0.34	F04
1 1/4	0.94	3.35	7.09	4.06	NPT 1 1/4	1.73	0.53	1.15	1.18	0.12	1.65	1/4-20UNC	0.32	M14	0.39	F04
1 1/2	1.18	3.58	7.09	4.33	NPT 1 1/2	1.95	0.53	1.07	1.18	0.12	1.65	1/4-20UNC	0.33	M14	0.39	F04
2	1.50	3.94	7.09	5.00	NPT 2	2.24	0.46	1.14	1.38	0.12	1.97	1/4-20UNC	0.39	M16	0.39	F05

AKU3THZM-FS
CODE NO. 329

KITZ

MATERIAL LIST

No.	Name of Parts	Materials
1	BODY	A351 Gr.CF8M
2	CAP	A351 Gr.CF8M
3	STEM	A276 TYPE316
4	BALL	A276 TYPE316 or A351 Gr,CF8M
7	GLAND	A276 TYPE316
8A	GLAND PACKING	FLEXIBLE GRAFITE
8B	SPACER PACKING	G/F PTFE
9	HANDLE	A276 TYPE430(1)
10	HANDLE NUT	STAINLESS STEEL
16A	WASHER	STAINLESS STEEL
16B	NAME PLATE	STAINLESS STEEL
19	GASKET	PTFE
30	BALL SEAT	HYPATITE® PTFE
34	GLAND NUT	STAINLESS STEEL
35	CAP BOLT	STAINLESS STEEL
40	LOCK PLATE	STAINLESS STEEL
43	CONED DISC SPTING	STAINLESS STEEL
47	THRUST WASHER	C/F PTFE(2) (25%CARBON FILLED)
126	STOPPER PIN	A276 TYPE304
A	LATCH LOCK	STAINLESS STEEL

NOTE

(1) Plastic covering.

(2) All valves have an anti-static thrust washer insuring positive conductivity between body and stem.

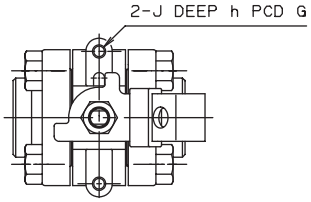

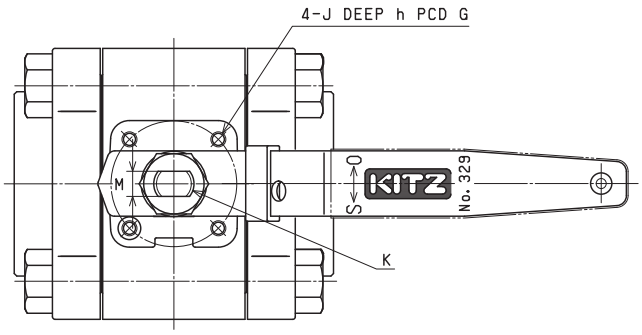

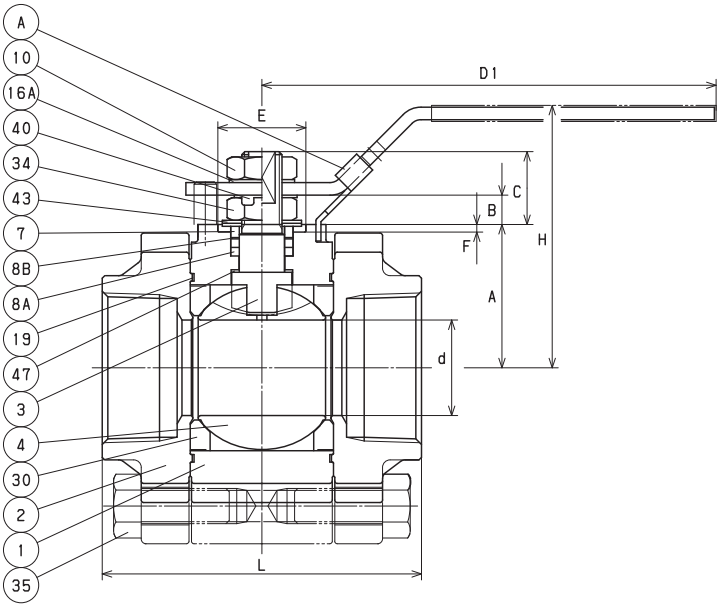

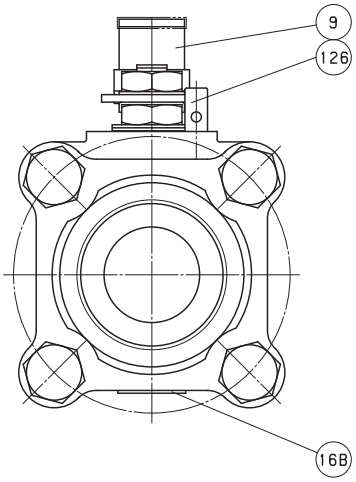

DIMENSIONS

Unit : inch

Nominal Size						Mounting Dimensions for Actuator										
in.	d	H	D1	L	d2	A	B	C	E	F	G	J	h	K	M	ISO 5211 Flange Type
1/2	0.39	1.89	4.72	2.48	NPT 1/2	1.04	0.08	0.41	—	—	1.97	1/4-20UNC	0.28	M8	0.20	—
3/4	0.55	2.36	5.12	2.80	NPT 3/4	1.38	0.17	0.56	0.98	0.12	1.42	1/4-20UNC	0.20	M10	0.24	F03
1	0.75	2.68	5.12	3.54	NPT 1	1.69	0.20	0.67	1.18	0.12	1.65	1/4-20UNC	0.24	M12	0.34	F04
1 1/4	0.94	3.23	5.91	4.06	NPT 1 1/4	1.73	0.53	1.15	1.18	0.12	1.65	1/4-20UNC	0.32	M14	0.39	F04
1 1/2	1.18	3.46	5.91	4.33	NPT 1 1/2	1.95	0.53	1.07	1.18	0.12	1.65	1/4-20UNC	0.33	M14	0.39	F04
2	1.50	4.09	7.09	5.00	NPT 2	2.24	0.46	1.14	1.38	0.12	1.97	1/4-20UNC	0.39	M16	0.39	F05

AKU3THZM-FS
CODE NO. 329

MATERIAL LIST

No.	Name of Parts	Materials
1	BODY	A351 Gr. CF8M
2	CAP	A351 Gr. CF8M
3	STEM	A276 TYPE 316
4	BALL	A351 Gr. CF8M
7	GLAND	A351 Gr. CF8
8 A	GLAND PACKING	FLEXIBLE GRAPHITE
8 B	SPACER PACKING	G/F PTFE
9	HANDLE	DUCTILE IRON
16	NAME PLATE	STAINLESS STEEL
19	GASKET	(2)
30	BALL SEAT	HYPATITE® PTFE
35	CAP BOLT	A193 Gr. B8
36	GLAND BOLT	A193 Gr. B8
40	KEY LOCK PLATE	STAINLESS STEEL
47	THRUST WASHER	25% CARBON FILLED PTFE (1)
48	SNAP RING	STAINLESS STEEL
49	STOPPER	STAINLESS STEEL
123	HANDLE BOLT	STAINLESS STEEL
124	SPRING & PIN	A313 & A276 TYPE 316
126	STOPPER PIN	STAINLESS STEEL

NOTE

(1) All valves have an anti-static thrust washer insuring positive conductivity between body and stem.
(2) Flexible graphite with stainless foil insert.

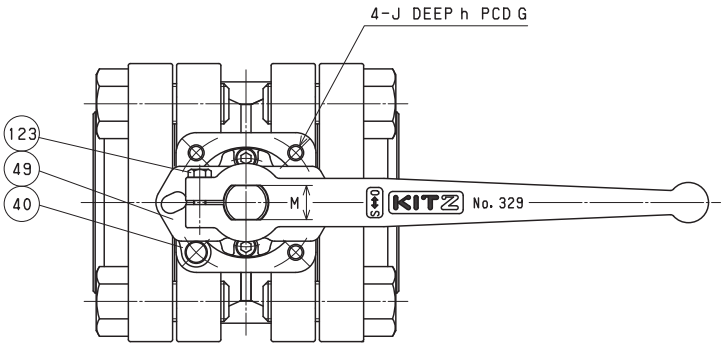

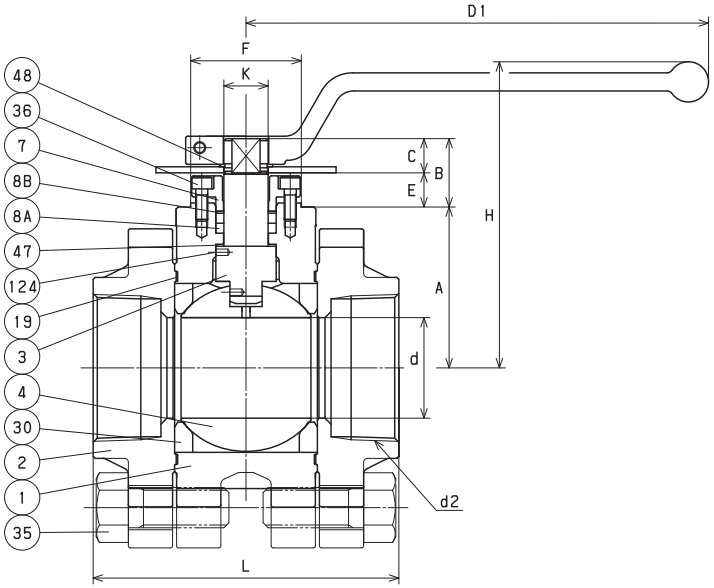

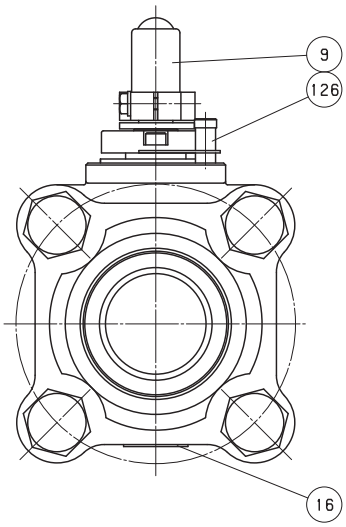

DIMENSIONS

Unit : inch

Nominal Size						Mounting Dimensions for Actuator										
in.	d	H	D1	L	d2	A	B	C	E	F	K	G	J	h	M	ISO 5211 Flange Type
2 1/2	1.97	5.98	9.06	5.98	NPT 2 1/2	3.15	1.34	0.67	0.67	2.17	0.87	2.76	5/16-18UNC	0.59	0.67	F07

AWSC3TFZM-O
CODE NO. 317FS-LOH

MATERIAL LIST

No.	Name of Parts	Materials
1	BODY	A216 Gr. WCB
2	CAP	A216 Gr. WCB
3	STEM	A276 TYPE316
4	BALL	A276 TYPE316 or A351 Gr,CF8M
7	GLAND	A276 TYPE316
8	GLAND PACKING	PTFE
9	HANDLE	A276 TYPE430(1)
10	HANDLE NUT	STAINLESS STEEL
16A	WASHER	STAINLESS STEEL
16B	NAME PLATE	STAINLESS STEEL
19	GASKET	PTFE
30	BALL SEAT	HYPATITE® PTFE
34	GLAND NUT	STAINLESS STEEL
35	CAP BOLT	STAINLESS STEEL
40	LOCK PLATE	STAINLESS STEEL
43	CONED DISC SPTING	STAINLESS STEEL
47	THRUST WASHER	PTFE(2)
126	STOPPER PIN	A276 TYPE304
A	LATCH LOCK	STAINLESS STEEL

NOTE

(1) Plastic covering.

(2) Stem—to-body grounding optional available.

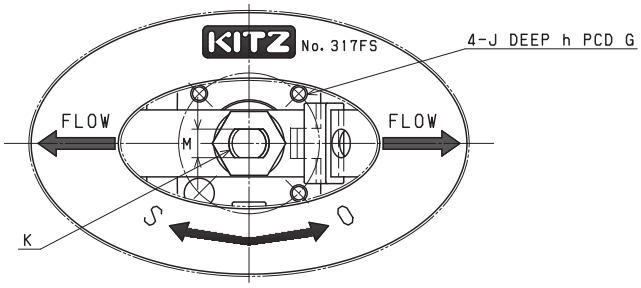

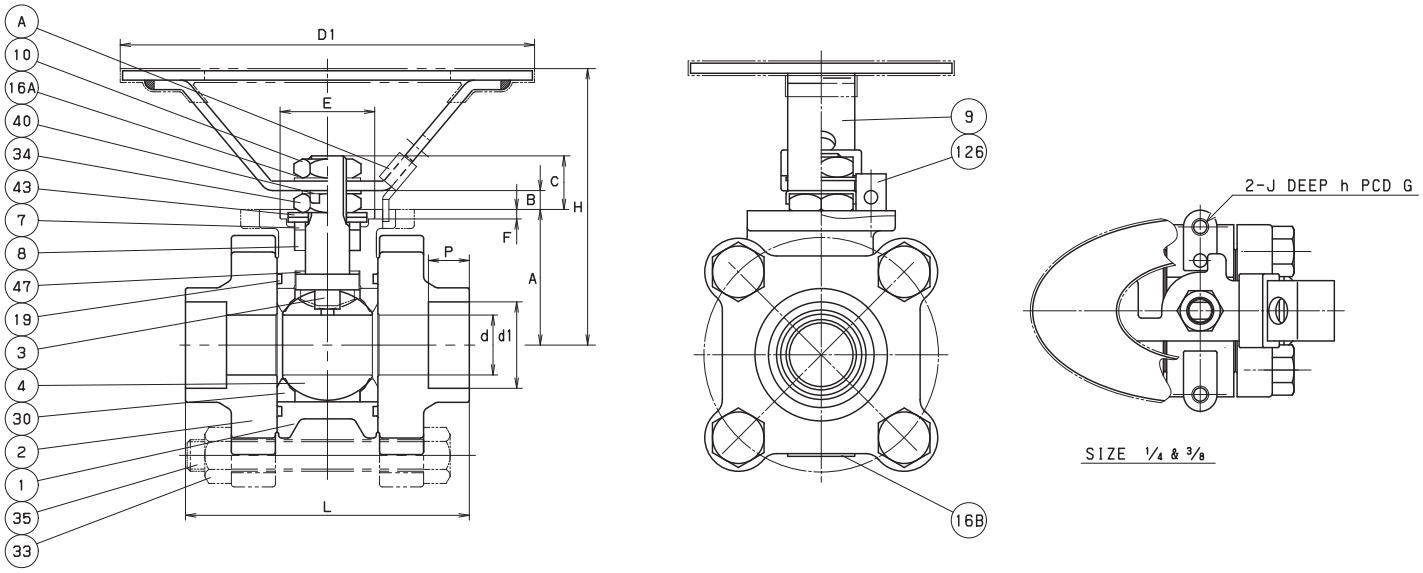

DIMENSIONS

Unit : inch

Nominal Size					Welding End		Mounting Dimensions for Actuator										
in.	d	H	D1	L	d1	P	A	B	C	E	F	G	J	h	K	M	ISO 5211 Flange Type
1/4	0.39	2.48	3.94	2.48	0.56	0.38	1.04	0.08	0.41	—	—	1.97	1/4-20UNC	0.28	M8	0.20	—
3/8	0.39	2.48	3.94	2.48	0.69	0.38	1.04	0.08	0.41	—	—	1.97	1/4-20UNC	0.28	M8	0.20	—
1/2	0.55	3.07	5.12	2.80	0.86	0.38	1.38	0.17	0.56	0.98	0.12	1.42	1/4-20UNC	0.20	M10	0.24	F03
3/4	0.75	3.43	5.12	3.54	1.07	0.50	1.69	0.20	0.67	1.18	0.12	1.65	1/4-20UNC	0.24	M12	0.34	F04
1	0.94	3.35	7.09	4.06	1.33	0.50	1.73	0.53	1.15	1.18	0.12	1.65	1/4-20UNC	0.32	M14	0.39	F04
1 1/4	1.18	3.58	7.09	4.33	1.68	0.50	1.95	0.53	1.07	1.18	0.12	1.65	1/4-20UNC	0.32	M14	0.39	F04
1 1/2	1.50	3.94	7.09	5.00	1.92	0.50	2.24	0.46	1.14	1.38	0.12	1.97	1/4-20UNC	0.39	M16	0.39	F05

AWSC3TFZM
CODE NO. 317FS

MATERIAL LIST

No.	Name of Parts	Materials
1	BODY	A216 Gr. WCB
2	CAP	A216 Gr. WCB
3	STEM	A276 TYPE316
4	BALL	A276 TYPE316 or A351 Gr,CF8M
7	GLAND	A276 TYPE316
8	GLAND PACKING	PTFE
9	HANDLE	A276 TYPE430(1)
10	HANDLE NUT	STAINLESS STEEL
16A	WASHER	STAINLESS STEEL
16B	NAME PLATE	STAINLESS STEEL
19	GASKET	PTFE
30	BALL SEAT	HYPATITE® PTFE
34	GLAND NUT	STAINLESS STEEL
35	CAP BOLT	STAINLESS STEEL
40	LOCK PLATE	STAINLESS STEEL
43	CONED DISC SPTING	STAINLESS STEEL
47	THRUST WASHER	PTFE(2)
126	STOPPER PIN	A276 TYPE304
A	LATCH LOCK	STAINLESS STEEL

NOTE

(1) Plastic covering.

(2) Stem—to-body grounding optional available.

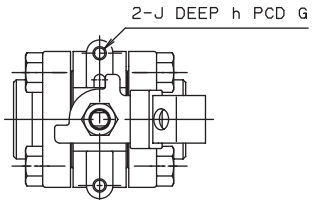

SIZE ¼ - ⅜

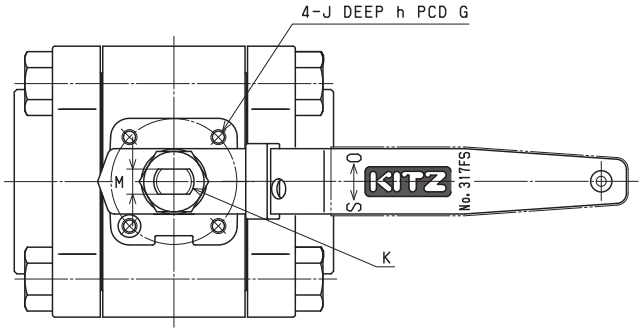

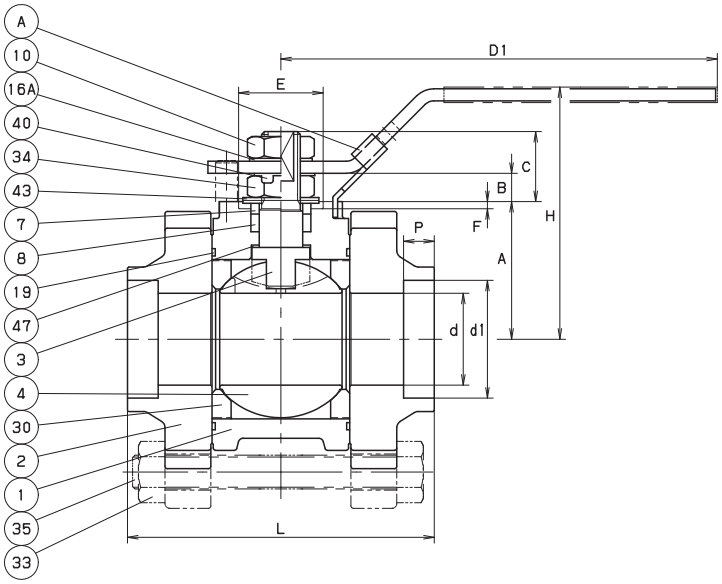

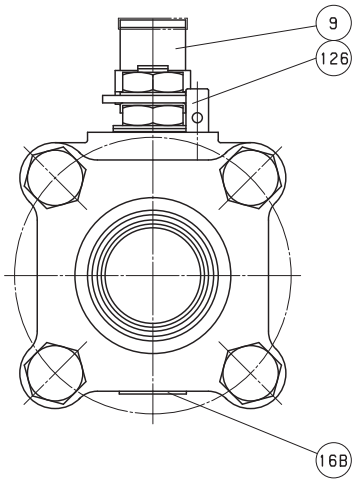

DIMENSIONS

Unit : inch

Nominal Size					Welding End		Mounting Dimensions for Actuator										
in.	d	H	D1	L	d1	P	A	B	C	E	F	G	J	h	K	M	ISO 5211 Flange Type
1/4	0.39	1.89	4.72	2.48	0.56	0.38	1.04	0.08	0.41	—	—	1.97	1/4-20UNC	0.28	M8	0.20	—
3/8	0.39	1.89	4.72	2.48	0.69	0.38	1.04	0.08	0.41	—	—	1.97	1/4-20UNC	0.28	M8	0.20	—
1/2	0.55	2.36	5.12	2.80	0.86	0.38	1.38	0.17	0.56	0.98	0.12	1.42	1/4-20UNC	0.20	M10	0.24	F03
3/4	0.75	2.68	5.12	3.54	1.07	0.50	1.69	0.20	0.67	1.18	0.12	1.65	1/4-20UNC	0.24	M12	0.34	F04
1	0.94	3.23	5.91	4.06	1.33	0.50	1.73	0.53	1.15	1.18	0.12	1.65	1/4-20UNC	0.32	M14	0.39	F04
1 1/4	1.18	3.46	5.91	4.33	1.68	0.50	1.95	0.53	1.07	1.18	0.12	1.65	1/4-20UNC	0.32	M14	0.39	F04
1 1/2	1.50	4.09	7.09	5.00	1.92	0.50	2.24	0.46	1.14	1.38	0.12	1.97	1/4-20UNC	0.39	M16	0.39	F05

AWSC3TFZM
CODE NO. 317FS

KITZ

MATERIAL LIST

No.	Name of Parts	Materials
1	BODY	A216 Gr. WCB
2	CAP	A216 Gr. WCB
3	STEM	A276 TYPE316
4	BALL	A351 Gr. CF8M
7	GLAND	A351 Gr. CF8
8	GLAND PACKING	PTFE
9	HANDLE	DUCTILE IRON
16	NAME PLATE	STAINLESS STEEL
19	GASKET	PTFE
30	BALL SEAT	HYPATITE® PTFE
35	CAP BOLT	A193 Gr. B8
36	GLAND BOLT	A193 Gr. B8
40	KEY LOCK PLATE	STAINLESS STEEL
47	THRUST WASHER	PTFE (1)
48	SNAP RING	STAINLESS STEEL
49	STOPPER	STAINLESS STEEL
123	HANDLE BOLT	STAINLESS STEEL
124	SPRING & PIN	A313 & A276 TYPE316
126	STOPPER PIN	STAINLESS STEEL

NOTE

(1) Stem–to-body grounding optional available.

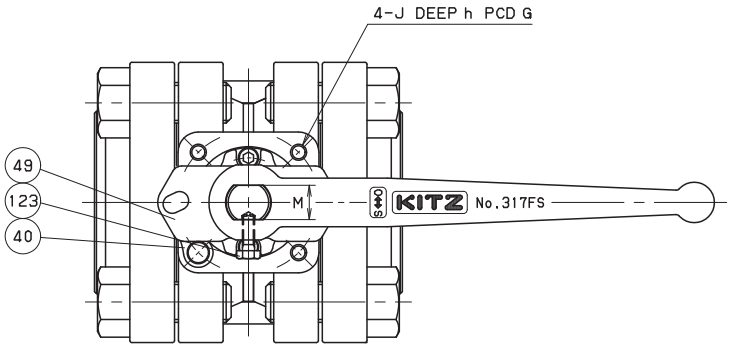

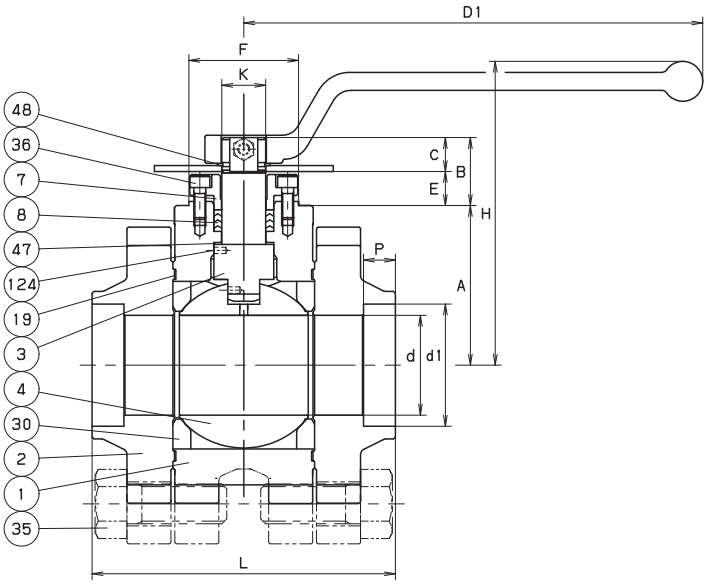

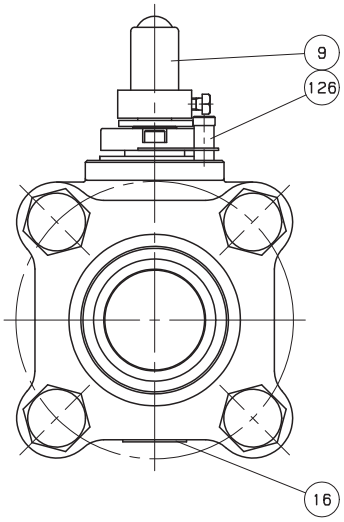

DIMENSIONS

Unit : inch

Nominal Size					Welding End		Mounting Dimensions for Actuator										
in.	d	H	D1	L	d1	P	A	B	C	E	F	K	G	J	h	M	ISO 5211 Flange Type
2	1.97	5.98	9.06	5.98	2.41	0.63	3.15	1.34	0.67	0.67	2.17	0.87	2.76	5/16-18UNC	0.59	0.67	F07

AWSC3THZM-O
CODE NO. 317S-LOH

MATERIAL LIST

No.	Name of Parts	Materials
1	BODY	A216 Gr. WCB
2	CAP	A216 Gr. WCB
3	STEM	A276 TYPE316
4	BALL	A276 TYPE316 or A351 Gr,CF8M
7	GLAND	A276 TYPE316
8	GLAND PACKING	PTFE
9	HANDLE	A276 TYPE430(1)
10	HANDLE NUT	STAINLESS STEEL
16A	WASHER	STAINLESS STEEL
16B	NAME PLATE	STAINLESS STEEL
19	GASKET	PTFE
30	BALL SEAT	HYPATITE® PTFE
34	GLAND NUT	STAINLESS STEEL
35	CAP BOLT	STAINLESS STEEL
40	LOCK PLATE	STAINLESS STEEL
43	CONED DISC SPTING	STAINLESS STEEL
47	THRUST WASHER	PTFE(2)
126	STOPPER PIN	A276 TYPE304
A	LATCH LOCK	STAINLESS STEEL

NOTE

(1) Plastic covering.

(2) Stem—to-body grounding optional available.

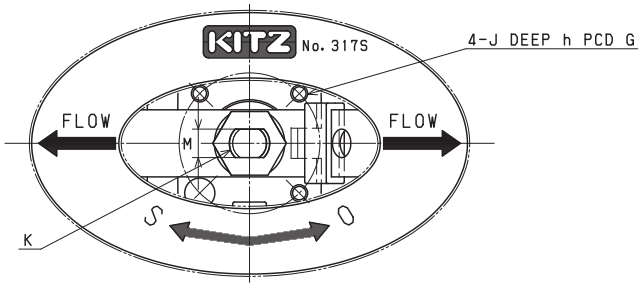

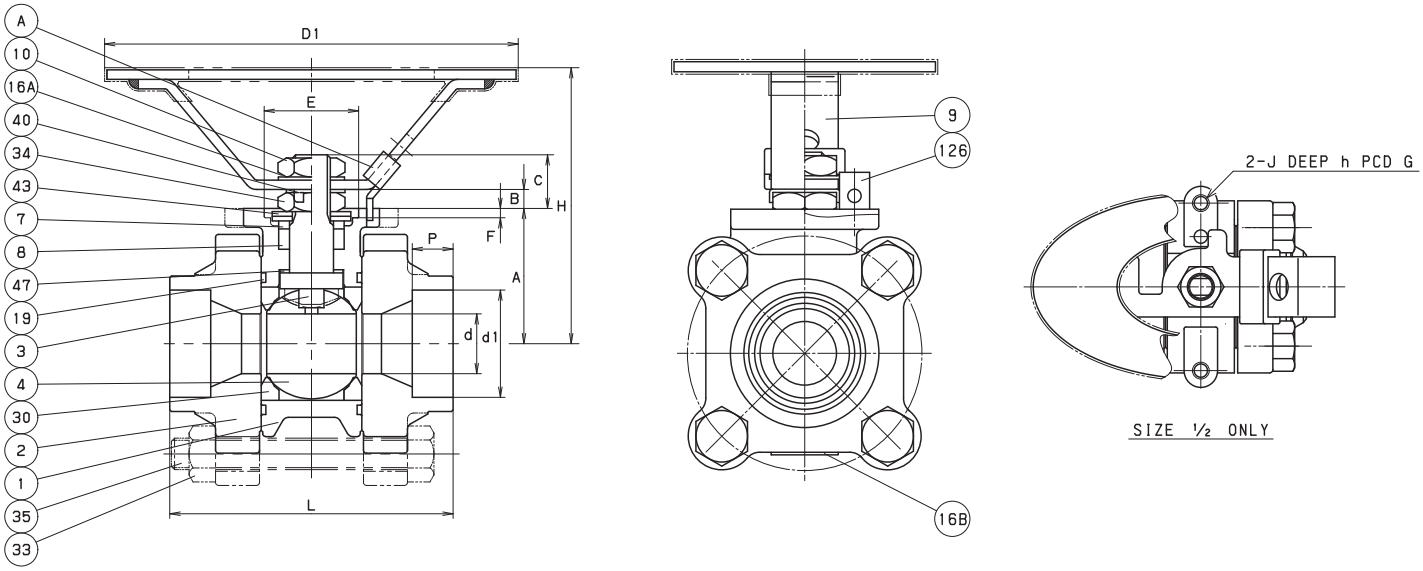

DIMENSIONS

Unit : inch

Nominal Size					Welding End		Mounting Dimensions for Actuator										
in.	d	H	D1	L	d1	P	A	B	C	E	F	G	J	h	K	M	ISO 5211 Flange Type
1/2	0.39	2.48	3.94	2.48	0.86	0.38	1.04	0.08	0.41	—	—	1.97	1/4-20UNC	0.28	M8	0.20	—
3/4	0.55	3.07	5.12	2.80	1.07	0.38	1.38	0.17	0.56	0.98	0.12	1.42	1/4-20UNC	0.20	M10	0.24	F03
1	0.75	3.43	5.12	3.54	1.33	0.38	1.69	0.20	0.67	1.18	0.12	1.65	1/4-20UNC	0.24	M12	0.34	F04
1 1/4	0.94	3.35	7.09	4.06	1.68	0.50	1.73	0.53	1.15	1.18	0.12	1.65	1/4-20UNC	0.32	M14	0.39	F04
1 1/2	1.18	3.58	7.09	4.33	1.92	0.50	1.95	0.53	1.07	1.18	0.12	1.65	1/4-20UNC	0.33	M14	0.39	F04
2	1.50	3.94	7.09	5.00	2.41	0.50	2.24	0.46	1.14	1.38	0.12	1.97	1/4-20UNC	0.39	M16	0.39	F05

AWSC3THZM
CODE NO. 317S

KITZ

MATERIAL LIST

No.	Name of Parts	Materials
1	BODY	A216 Gr. WCB
2	CAP	A216 Gr. WCB
3	STEM	A276 TYPE316
4	BALL	A276 TYPE316 or A351 Gr,CF8M
7	GLAND	A276 TYPE316
8	GLAND PACKING	PTFE
9	HANDLE	A276 TYPE430(1)
10	HANDLE NUT	STAINLESS STEEL
16A	WASHER	STAINLESS STEEL
16B	NAME PLATE	STAINLESS STEEL
19	GASKET	PTFE
30	BALL SEAT	HYPATITE® PTFE
34	GLAND NUT	STAINLESS STEEL
35	CAP BOLT	STAINLESS STEEL
40	LOCK PLATE	STAINLESS STEEL
43	CONED DISC SPTING	STAINLESS STEEL
47	THRUST WASHER	PTFE(2)
126	STOPPER PIN	A276 TYPE304
A	LATCH LOCK	STAINLESS STEEL

NOTE

(1) Plastic covering.

(2) Stem—to-body grounding optional available.

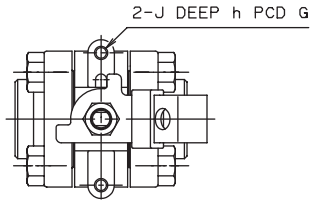

SIZE ½ ONLY

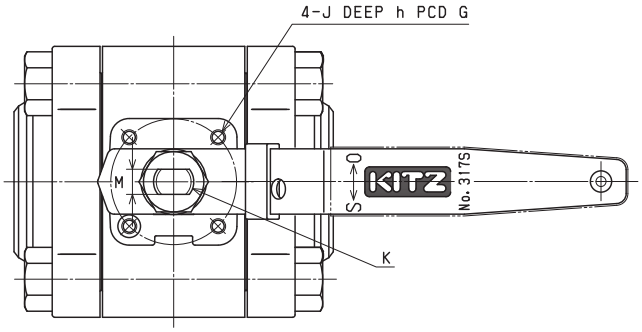

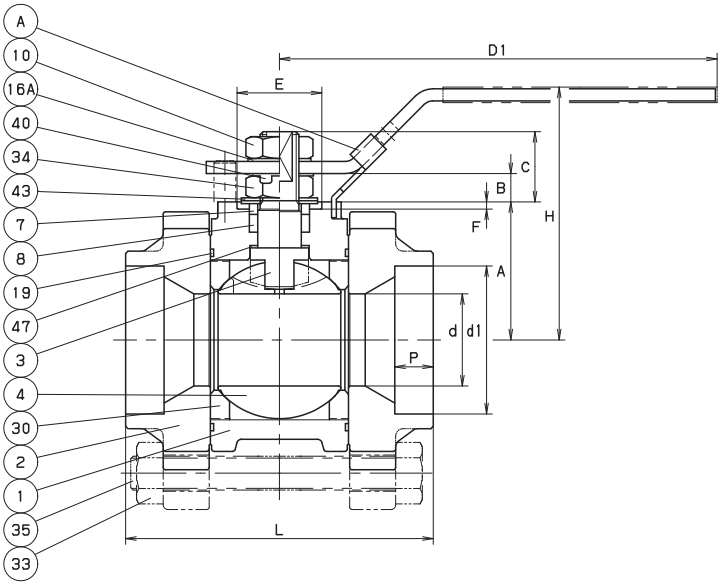

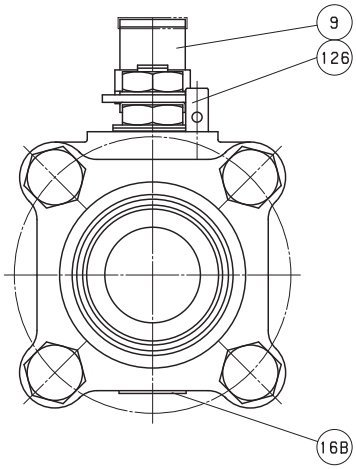

DIMENSIONS

Unit : inch

Nominal Size					Welding End		Mounting Dimensions for Actuator										
in.	d	H	D1	L	d1	P	A	B	C	E	F	G	J	h	K	M	ISO 5211 Flange Type
1/2	0.39	1.89	4.72	2.48	0.86	0.38	1.04	0.08	0.41	—	—	1.97	1/4-20UNC	0.28	M8	0.20	—
3/4	0.55	2.36	5.12	2.80	1.07	0.38	1.38	0.17	0.56	0.98	0.12	1.42	1/4-20UNC	0.20	M10	0.24	F03
1	0.75	2.68	5.12	3.54	1.33	0.38	1.69		0.67	1.18	0.12	1.65	1/4-20UNC	0.24	M12	0.34	F04
1 1/4	0.94	3.23	5.91	4.06	1.68	0.50	1.73	0.53	1.15	1.18	0.12	1.65	1/4-20UNC	0.32	M14	0.39	F04
1 1/2	1.18	3.46	5.91	4.33	1.92	0.50	1.95	0.53	1.07	1.18	0.12	1.65	1/4-20UNC	0.33	M14	0.39	F04
2	1.50	4.09	7.09	5.00	2.41	0.50	2.24	0.46	1.14	1.38	0.12	1.97	1/4-20UNC	0.39	M16	0.39	F05

AWSC3THZM
CODE NO. 317S

MATERIAL LIST

No.	Name of Parts	Materials
1	BODY	A216 Gr. WCB
2	CAP	A216 Gr. WCB
3	STEM	A276 TYPE316
4	BALL	A351 Gr. CF8M
7	GLAND	A351 Gr. CF8
8	GLAND PACKING	PTFE
9	HANDLE	DUCTILE IRON
16	NAME PLATE	STAINLESS STEEL
19	GASKET	PTFE
30	BALL SEAT	HYPATITE® PTFE
35	CAP BOLT	A193 Gr. B8
36	GLAND BOLT	A193 Gr. B8
40	KEY LOCK PLATE	STAINLESS STEEL
47	THRUST WASHER	PTFE (1)
48	SNAP RING	STAINLESS STEEL
49	STOPPER	STAINLESS STEEL
123	HANDLE BOLT	STAINLESS STEEL
124	SPRING & PIN	A313 & A276 TYPE316
126	STOPPER PIN	STAINLESS STEEL

NOTE

(1) Stem—to-body grounding optional available.

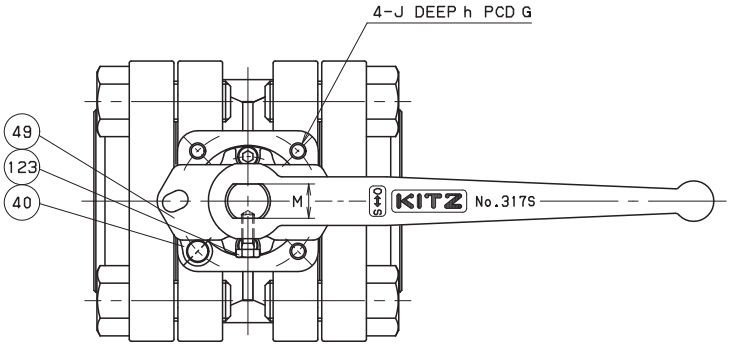

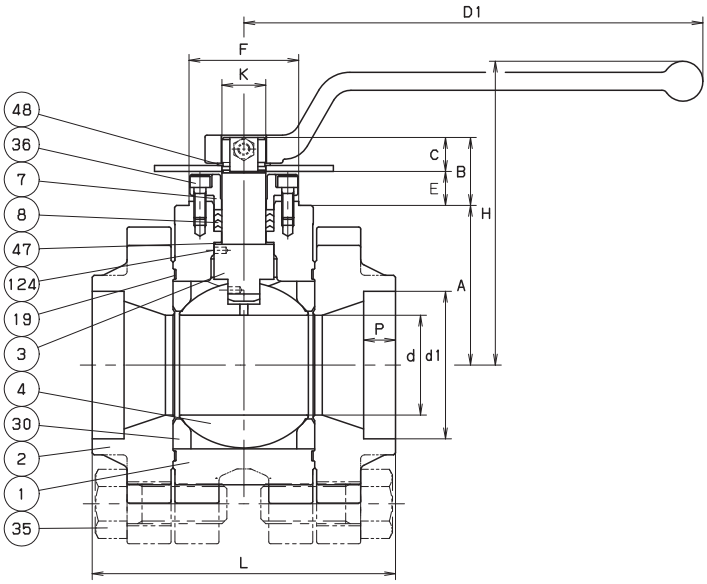

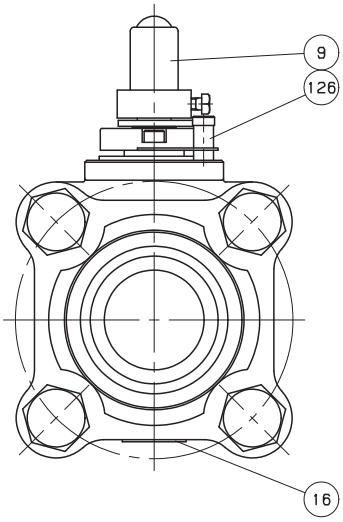

DIMENSIONS

Unit : inch

Nominal Size					Welding End		Mounting Dimensions for Actuator										
in.	d	H	D1	L	d1	P	A	B	C	E	F	K	G	J	h	M	ISO 5211 Flange Type
2 1/2	1.97	5.98	9.06	5.98	2.91	0.63	3.15	1.34	0.67	0.67	2.17	0.87	2.76	5/16-18UNC	0.59	0.67	F07

AWSC3TFZM-FSO
CODE NO. 319FS-LOH

MATERIAL LIST

No.	Name of Parts	Materials
1	BODY	A216 Gr. WCB
2	CAP	A216 Gr. WCB
3	STEM	A276 TYPE316
4	BALL	A276 TYPE316 or A351 Gr,CF8M
7	GLAND	A276 TYPE316
8A	GLAND PACKING	FLEXIBLE GRAFITE
8B	SPACER PACKING	G/F PTFE
9	HANDLE	A276 TYPE430(1)
10	HANDLE NUT	STAINLESS STEEL
16A	WASHER	STAINLESS STEEL
16B	NAME PLATE	STAINLESS STEEL
19	GASKET	PTFE
30	BALL SEAT	HYPATITE® PTFE
34	GLAND NUT	STAINLESS STEEL
35	CAP BOLT	STAINLESS STEEL
40	LOCK PLATE	STAINLESS STEEL
43	CONED DISC SPTING	STAINLESS STEEL
47	THRUST WASHER	C/F PTFE(2) (25%CARBON FILLED)
126	STOPPER PIN	A276 TYPE304
A	LATCH LOCK	STAINLESS STEEL

NOTE

(1) Plastic covering.

(2) All valves have an anti-static thrust washer insuring positive conductivity between body and stem.

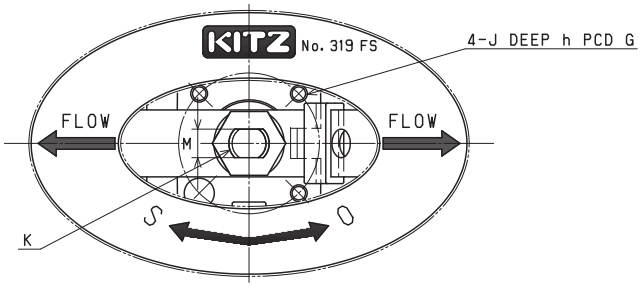

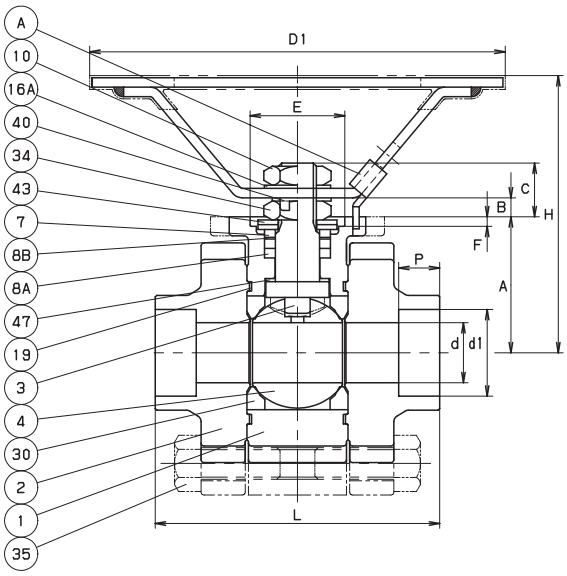

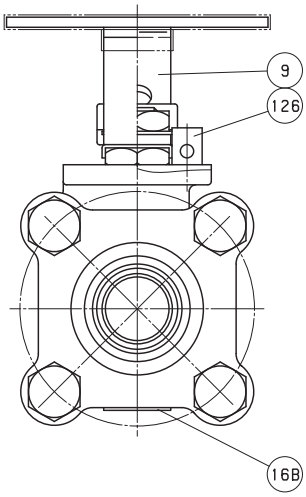

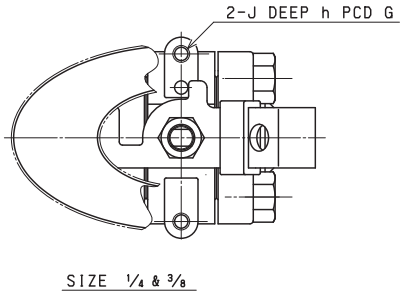

DIMENSIONS

Unit : inch

Nominal Size					Welding End		Mounting Dimensions for Actuator										
in.	d	H	D1	L	d1	P	A	B	C	E	F	G	J	h	K	M	ISO 5211 Flange Type
1/4	0.39	1.89	4.72	2.48	0.56	0.38	1.04	0.08	0.41	—	—	1.97	1/4-20UNC	0.28	M8	0.20	—
3/8	0.39	1.89	4.72	2.48	0.69	0.38	1.04	0.08	0.41	—	—	1.97	1/4-20UNC	0.28	M8	0.20	—
1/2	0.55	2.36	5.12	2.80	0.86	0.38	1.38	0.17	0.56	0.98	0.12	1.42	1/4-20UNC	0.20	M10	0.24	F03
3/4	0.75	2.68	5.12	3.54	1.07	0.50	1.69	0.20	0.67	1.18	0.12	1.65	1/4-20UNC	0.24	M12	0.34	F04
1	0.94	3.23	5.91	4.06	1.33	0.50	1.73	0.53	1.15	1.18	0.12	1.65	1/4-20UNC	0.32	M14	0.39	F04
1 1/4	1.18	3.46	5.91	4.33	1.68	0.50	1.95	0.53	1.07	1.18	0.12	1.65	1/4-20UNC	0.32	M14	0.39	F04
1 1/2	1.50	4.09	7.09	5.00	1.92	0.50	2.24	0.46	1.14	1.38	0.12	1.97	1/4-20UNC	0.39	M16	0.39	F05

AWSC3TFZM-FS
CODE NO. 319FS

MATERIAL LIST

No.	Name of Parts	Materials
1	BODY	A216 Gr. WCB
2	CAP	A216 Gr. WCB
3	STEM	A276 TYPE316
4	BALL	A276 TYPE316 or A351 Gr,CF8M
7	GLAND	A276 TYPE316
8A	GLAND PACKING	FLEXIBLE GRAFITE
8B	SPACER PACKING	G/F PTFE
9	HANDLE	A276 TYPE430(1)
10	HANDLE NUT	STAINLESS STEEL
16A	WASHER	STAINLESS STEEL
16B	NAME PLATE	STAINLESS STEEL
19	GASKET	PTFE
30	BALL SEAT	HYPATITE® PTFE
34	GLAND NUT	STAINLESS STEEL
35	CAP BOLT	STAINLESS STEEL
40	LOCK PLATE	STAINLESS STEEL
43	CONED DISC SPTING	STAINLESS STEEL
47	THRUST WASHER	C/F PTFE(2) (25%CARBON FILLED)
126	STOPPER PIN	A276 TYPE304
A	LATCH LOCK	STAINLESS STEEL

NOTE

(1) Plastic covering.
(2) All valves have an anti-static thrust washer insuring positive conductivity between body and stem.

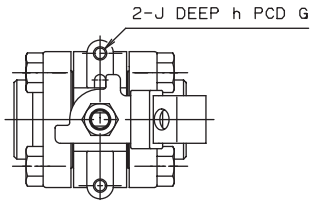

SIZE ¼ - ⅜

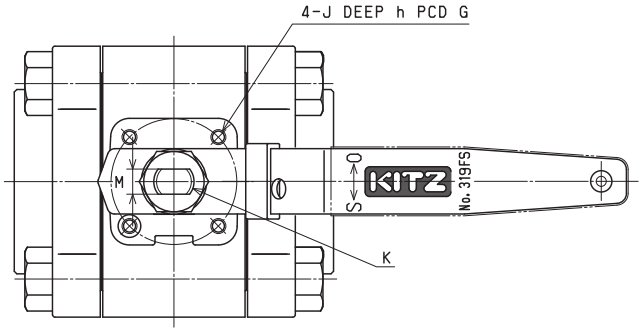

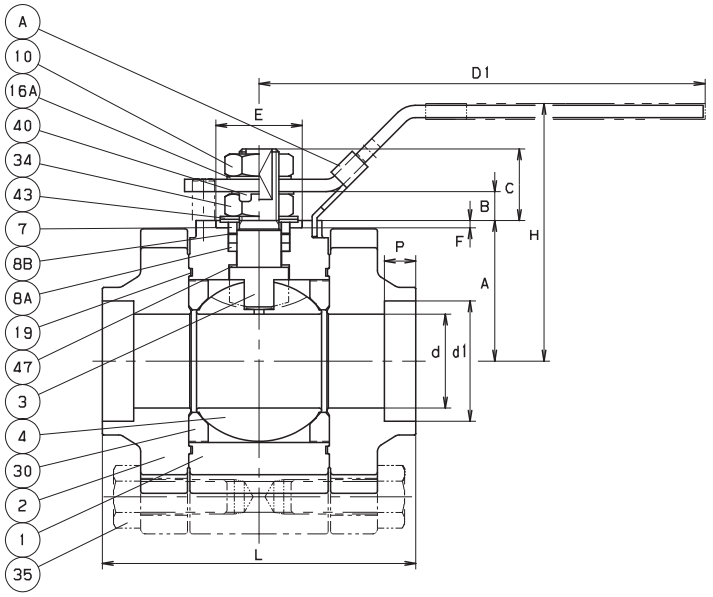

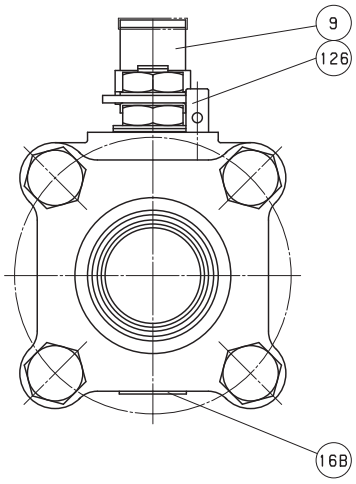

DIMENSIONS

Unit : inch

Nominal Size					Welding End		Mounting Dimensions for Actuator										
in.	d	H	D1	L	d1	P	A	B	C	E	F	G	J	h	K	M	ISO 5211 Flange Type
1/4	0.39	1.89	4.72	2.48	0.56	0.38	1.04	0.08	0.41	—	—	1.97	1/4-20UNC	0.28	M8	0.20	—
3/8	0.39	1.89	4.72	2.48	0.69	0.38	1.04	0.08	0.41	—	—	1.97	1/4-20UNC	0.28	M8	0.20	—
1/2	0.55	2.36	5.12	2.80	0.86	0.38	1.38	0.17	0.56	0.98	0.12	1.42	1/4-20UNC	0.20	M10	0.24	F03
3/4	0.75	2.68	5.12	3.54	1.07	0.50	1.69	0.20	0.67	1.18	0.12	1.65	1/4-20UNC	0.24	M12	0.34	F04
1	0.94	3.23	5.91	4.06	1.33	0.50	1.73	0.53	1.15	1.18	0.12	1.65	1/4-20UNC	0.32	M14	0.39	F04
1 1/4	1.18	3.46	5.91	4.33	1.68	0.50	1.95	0.53	1.07	1.18	0.12	1.65	1/4-20UNC	0.32	M14	0.39	F04
1 1/2	1.50	4.09	7.09	5.00	1.92	0.50	2.24	0.46	1.14	1.38	0.12	1.97	1/4-20UNC	0.39	M16	0.39	F05

AWSC3TFZM-FS
CODE NO. 319FS

KITZ

MATERIAL LIST

No.	Name of Parts	Materials
1	BODY	A216 Gr. WCB
2	CAP	A216 Gr. WCB
3	STEM	A276 TYPE316
4	BALL	A351 Gr. CF8M
7	GLAND	A351 Gr. CF8
8 A	GLAND PACKING	FLEXIBLE GRAPHITE
8 B	SPACER PACKING	G/F PTFE
9	HANDLE	DUCTILE IRON
16	NAME PLATE	STAINLESS STEEL
19	GASKET	(2)
30	BALL SEAT	HYPATITE® PTFE
35	CAP BOLT	A193 Gr. B8
36	GLAND BOLT	A193 Gr. B8
40	KEY LOCK PLATE	STAINLESS STEEL
47	THRUST WASHER	25% CARBON FILLED PTFE (1)
48	SNAP RING	STAINLESS STEEL
49	STOPPER	STAINLESS STEEL
123	HANDLE BOLT	STAINLESS STEEL
124	SPRING & PIN	A313 & A276 TYPE316
126	STOPPER PIN	STAINLESS STEEL

NOTE

(1) All valves have an anti-static thrust washer insuring positive conductivity between body and stem.

(2) Stainless foil inserted flexible graphite.

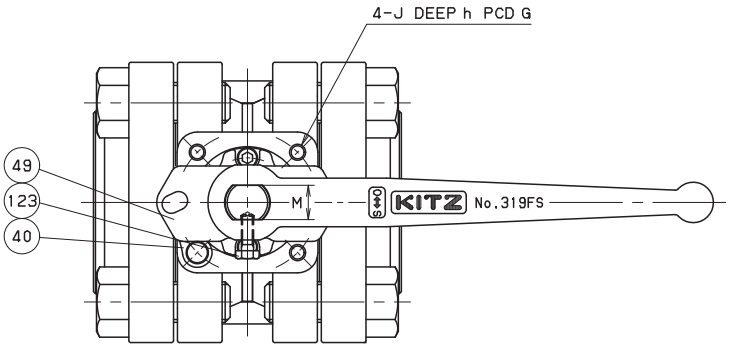

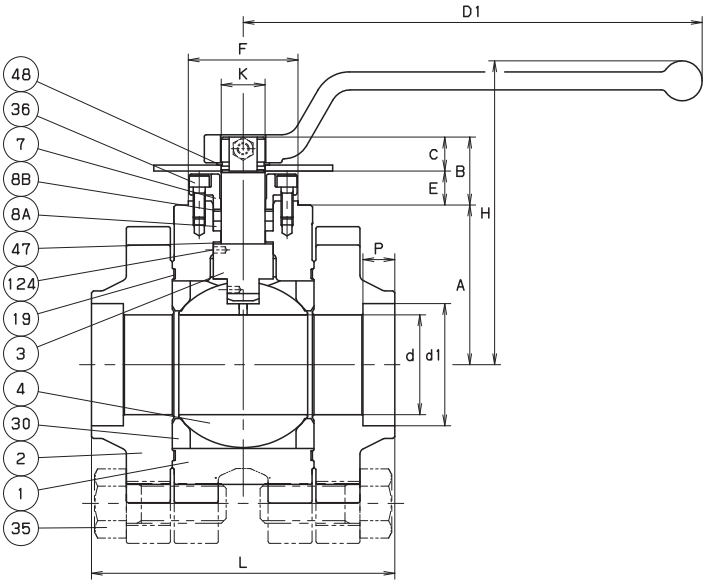

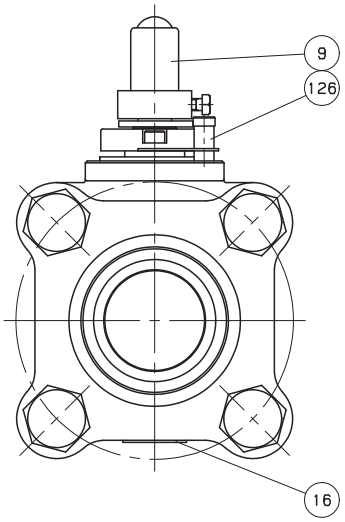

DIMENSIONS

Unit : inch

Nominal Size					Welding End		Mounting Dimensions for Actuator										
in.	d	H	D1	L	d1	P	A	B	C	E	F	K	G	J	h	M	ISO 5211 Flange Type
2	1.97	5.98	9.06	5.98	2.41	0.63	3.15	1.34	0.67	0.67	2.17	0.87	2.76	5/16-18UNC	0.59	0.67	F07

AWSC3THZM-FSO
CODE NO. 319S-LOH

MATERIAL LIST

No.	Name of Parts	Materials
1	BODY	A216 Gr. WCB
2	CAP	A216 Gr. WCB
3	STEM	A276 TYPE316
4	BALL	A276 TYPE316 or A351 Gr,CF8M
7	GLAND	A276 TYPE316
8A	GLAND PACKING	FLEXIBLE GRAFITE
8B	SPACER PACKING	G/F PTFE
9	HANDLE	A276 TYPE430(1)
10	HANDLE NUT	STAINLESS STEEL
16A	WASHER	STAINLESS STEEL
16B	NAME PLATE	STAINLESS STEEL
19	GASKET	PTFE
30	BALL SEAT	HYPATITE® PTFE
34	GLAND NUT	STAINLESS STEEL
35	CAP BOLT	STAINLESS STEEL
40	LOCK PLATE	STAINLESS STEEL
43	CONED DISC SPTING	STAINLESS STEEL
47	THRUST WASHER	C/F PTFE(2) (25%CARBON FILLED)
126	STOPPER PIN	A276 TYPE304
A	LATCH LOCK	STAINLESS STEEL

NOTE

(1) Plastic covering.

(2) All valves have an anti-static thrust washer insuring positive conductivity between body and stem.

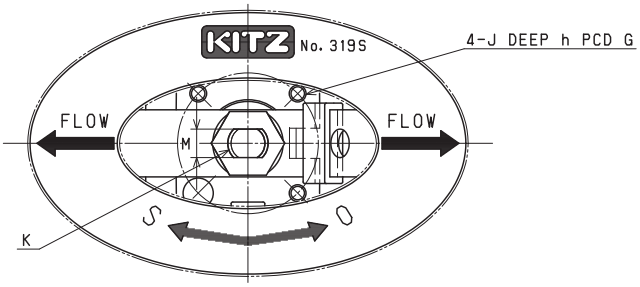

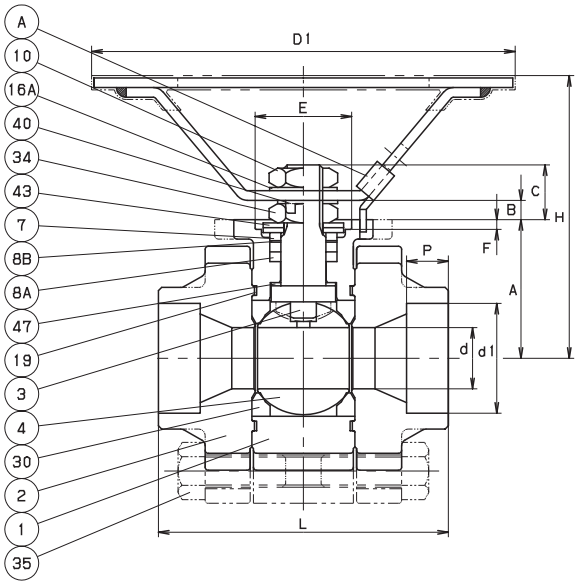

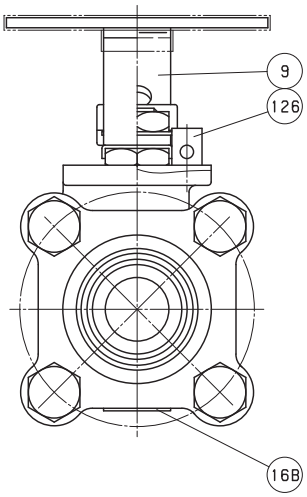

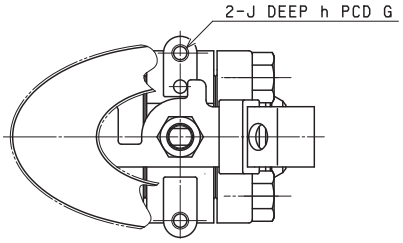

DIMENSIONS

Unit : inch

Nominal Size					Welding End		Mounting Dimensions for Actuator										
in.	d	H	D1	L	d1	P	A	B	C	E	F	G	J	h	K	M	ISO 5211 Flange Type
1/2	0.39	1.89	4.72	2.48	0.86	0.38	1.04	0.08	0.41	—	—	1.97	1/4-20UNC	0.28	M8	0.20	—
3/4	0.55	2.36	5.12	2.80	1.07	0.38	1.38	0.17	0.56	0.98	0.12	1.42	1/4-20UNC	0.20	M10	0.24	F03
1	0.75	2.68	5.12	3.54	1.33	0.38	1.69	0.20	0.67	1.18	0.12	1.65	1/4-20UNC	0.24	M12	0.34	F04
1 1/4	0.94	3.23	5.91	4.06	1.68	0.50	1.73	0.53	1.15	1.18	0.12	1.65	1/4-20UNC	0.32	M14	0.39	F04
1 1/2	1.18	3.46	5.91	4.33	1.92	0.50	1.95	0.53	1.07	1.18	0.12	1.65	1/4-20UNC	0.33	M14	0.39	F04
2	1.50	4.09	7.09	5.00	2.41	0.50	2.24	0.46	1.14	1.38	0.12	1.97	1/4-20UNC	0.39	M16	0.39	F05

AWSC3THZM-FS
CODE NO. 319S

KITZ

MATERIAL LIST

No.	Name of Parts	Materials
1	BODY	A216 Gr. WCB
2	CAP	A216 Gr. WCB
3	STEM	A276 TYPE316
4	BALL	A276 TYPE316 or A351 Gr,CF8M
7	GLAND	A276 TYPE316
8A	GLAND PACKING	FLEXIBLE GRAFITE
8B	SPACER PACKING	G/F PTFE
9	HANDLE	A276 TYPE430(1)
10	HANDLE NUT	STAINLESS STEEL
16A	WASHER	STAINLESS STEEL
16B	NAME PLATE	STAINLESS STEEL
19	GASKET	PTFE
30	BALL SEAT	HYPATITE® PTFE
34	GLAND NUT	STAINLESS STEEL
35	CAP BOLT	STAINLESS STEEL
40	LOCK PLATE	STAINLESS STEEL
43	CONED DISC SPTING	STAINLESS STEEL
47	THRUST WASHER	C/F PTFE(2) (25%CARBON FILLED)
126	STOPPER PIN	A276 TYPE304
A	LATCH LOCK	STAINLESS STEEL

NOTE

(1) Plastic covering.

(2) All valves have an anti-static thrust washer insuring positive conductivity between body and stem.

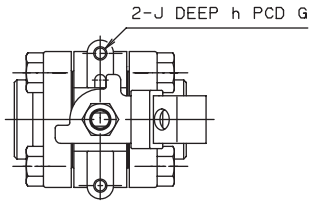

SIZE ½ ONLY

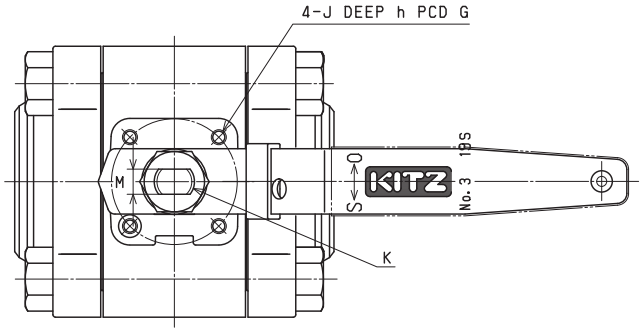

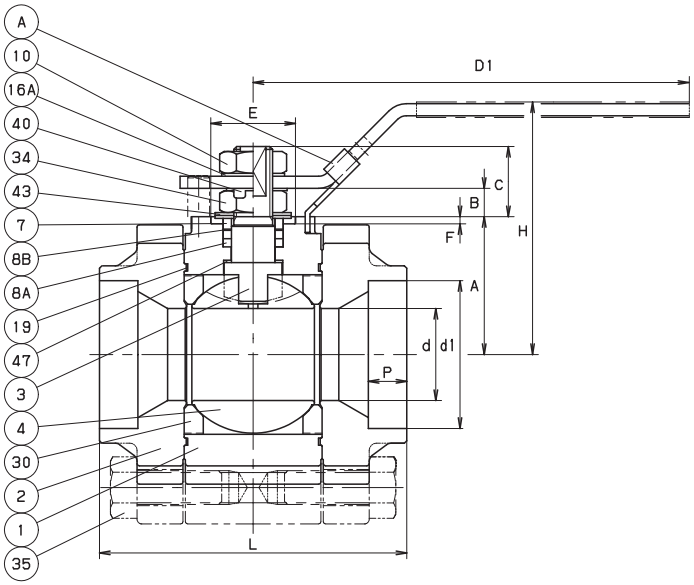

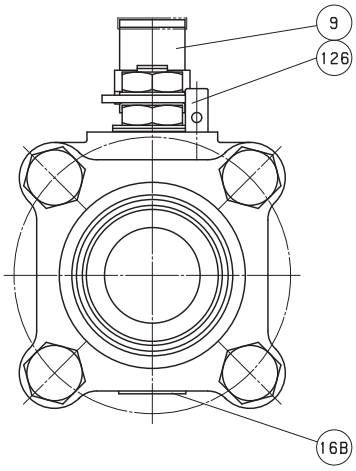

DIMENSIONS

Unit : inch

Nominal Size					Welding End		Mounting Dimensions for Actuator										
in.	d	H	D1	L	d1	P	A	B	C	E	F	G	J	h	K	M	ISO 5211 Flange Type
1/2	0.39	1.89	4.72	2.48	0.86	0.38	1.04	0.08	0.41	—	—	1.97	1/4-20UNC	0.28	M8	0.20	—
3/4	0.55	2.36	5.12	2.80	1.07	0.50	1.38	0.17	0.56	0.98	0.12	1.42	1/4-20UNC	0.20	M10	0.24	F03
1	0.75	2.68	5.12	3.54	1.33	0.50	1.69	0.20	0.67	1.18	0.12	1.65	1/4-20UNC	0.24	M12	0.34	F04
1 1/4	0.94	3.23	5.91	4.06	1.68	0.50	1.73	0.53	1.15	1.18	0.12	1.65	1/4-20UNC	0.32	M14	0.39	F04
1 1/2	1.18	3.46	5.91	4.33	1.92	0.50	1.95	0.53	1.07	1.18	0.12	1.65	1/4-20UNC	0.33	M14	0.39	F04
2	1.50	4.09	7.09	5.00	2.41	0.63	2.24	0.46	1.14	1.38	0.12	1.97	1/4-20UNC	0.39	M16	0.39	F05

AWSC3THZM-FS
CODE NO. 319S

MATERIAL LIST

No.	Name of Parts	Materials
1	BODY	A216 Gr. WCB
2	CAP	A216 Gr. WCB
3	STEM	A276 TYPE316
4	BALL	A351 Gr. CF8M
7	GLAND	A351 Gr. CF8
8 A	GLAND PACKING	FLEXIBLE GRAPHITE
8 B	SPACER PACKING	G/F PTFE
9	HANDLE	DUCTILE IRON
16	NAME PLATE	STAINLESS STEEL
19	GASKET	(2)
30	BALL SEAT	HYPATITE® PTFE
35	CAP BOLT	A193 Gr. B8
36	GLAND BOLT	A193 Gr. B8
40	KEY LOCK PLATE	STAINLESS STEEL
47	THRUST WASHER	25% CARBON FILLED PTFE (1)
48	SNAP RING	STAINLESS STEEL
49	STOPPER	STAINLESS STEEL
123	HANDLE BOLT	STAINLESS STEEL
124	SPRING & PIN	A313 & A276 TYPE316
126	STOPPER PIN	STAINLESS STEEL

NOTE

(1) All valves have an anti-static thrust washer insuring positive conductivity between body and stem.

(2) Stainless foil inserted flexible graphite.

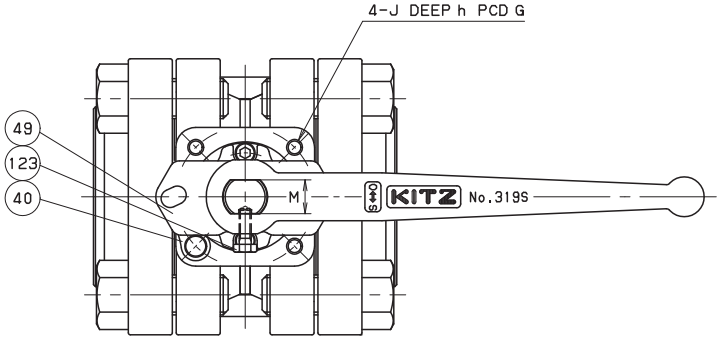

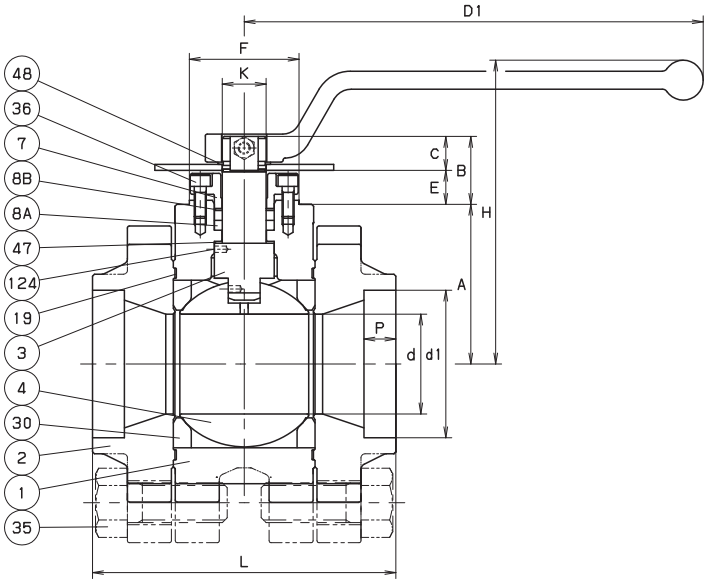

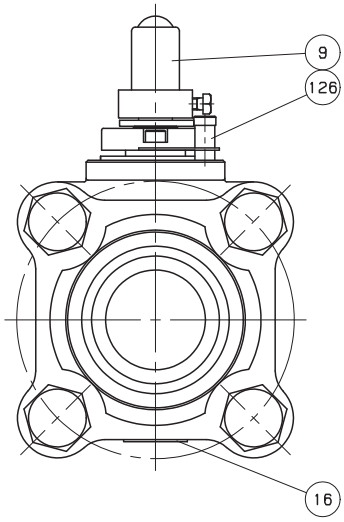

DIMENSIONS

Unit : inch

Nominal Size					Welding End		Mounting Dimensions for Actuator										
in.	d	H	D1	L	d1	P	A	B	C	E	F	K	G	J	h	M	ISO 5211 Flange Type
2 1/2	1.97	5.98	9.06	5.98	2.91	0.63	3.15	1.34	0.67	0.67	2.17	0.87	2.76	5/16-18UNC	0.59	0.67	F07

AWU3TFZM-O
CODE NO. 327FS-LOH

MATERIAL LIST

No.	Name of Parts	Materials
1	BODY	A351 Gr.CF8M
2	CAP	A351 Gr.CF8M
3	STEM	A276 TYPE316
4	BALL	A276 TYPE316 or A351 Gr,CF8M
7	GLAND	A276 TYPE316
8	GLAND PACKING	PTFE
9	HANDLE	A276 TYPE430(1)
10	HANDLE NUT	STAINLESS STEEL
16A	WASHER	STAINLESS STEEL
16B	NAME PLATE	STAINLESS STEEL
19	GASKET	PTFE
30	BALL SEAT	HYPATITE® PTFE
34	GLAND NUT	STAINLESS STEEL
35	CAP BOLT	STAINLESS STEEL
40	LOCK PLATE	STAINLESS STEEL
43	CONED DISC SPTING	STAINLESS STEEL
47	THRUST WASHER	PTFE(2)
126	STOPPER PIN	A276 TYPE304
A	LATCH LOCK	STAINLESS STEEL

NOTE

(1) Plastic covering.

(2) Stem—to-body grounding optional available.

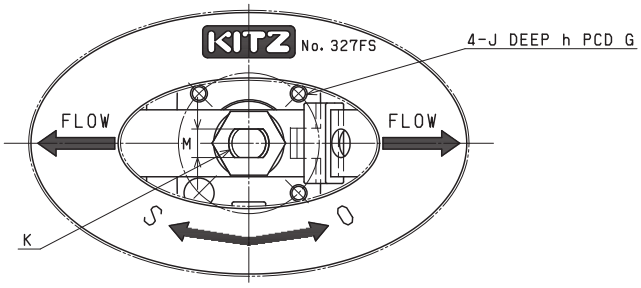

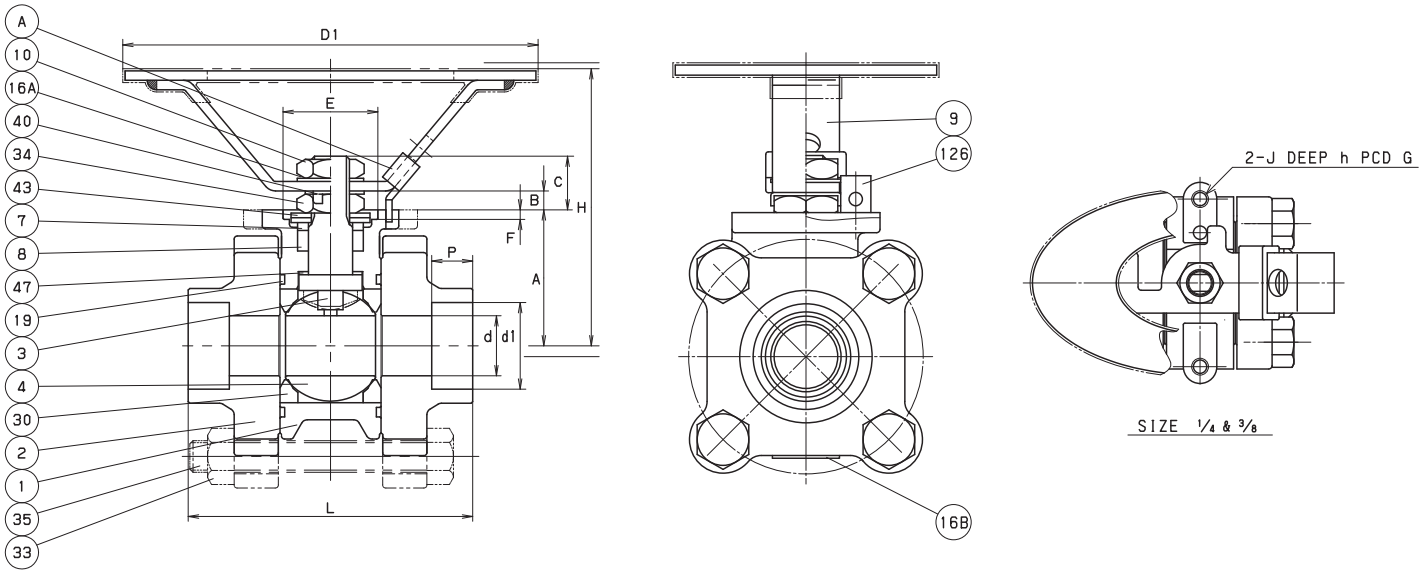

DIMENSIONS

Unit : inch

Nominal Size					Welding End		Mounting Dimensions for Actuator										
in.	d	H	D1	L	d1	P	A	B	C	E	F	G	J	h	K	M	ISO 5211 Flange Type
1/4	0.39	2.48	3.94	2.48	0.56	0.38	1.04	0.08	0.41	—	—	1.97	1/4-20UNC	0.28	M8	0.20	—
3/8	0.39	2.48	3.94	2.48	0.69	0.38	1.38	0.17	0.56	0.98	0.12	1.42	1/4-20UNC	0.20	M10	0.24	—
1/2	0.55	3.07	5.12	2.80	0.86	0.38	1.69	0.20	0.67	1.18	0.12	1.65	1/4-20UNC	0.24	M12	0.34	F03
3/4	0.75	3.43	5.12	3.54	1.07	0.50	1.73	0.53	1.15	1.18	0.12	1.65	1/4-20UNC	0.32	M14	0.39	F04
1	0.94	3.35	7.09	4.06	1.33	0.50	1.95	0.53	1.07	1.18	0.12	1.65	1/4-20UNC	0.33	M14	0.39	F04
1 1/4	1.18	3.58	7.09	4.33	1.68	0.50	2.24	0.46	1.14	1.38	0.12	1.97	1/4-20UNC	0.39	M16	0.39	F04
1 1/2	1.50	3.94	7.09	5.00	1.92	0.50	1.04	0.08	0.41	—	—	1.97	1/4-20UNC	0.28	M8	0.20	F05

AWU3TFZM
CODE NO. 327FS

MATERIAL LIST

No.	Name of Parts	Materials
1	BODY	A351 Gr.CF8M
2	CAP	A351 Gr.CF8M
3	STEM	A276 TYPE316
4	BALL	A276 TYPE316 or A351 Gr,CF8M
7	GLAND	A276 TYPE316
8A	GLAND PACKING	FLEXIBLE GRAFITE
8B	SPACER PACKING	G/F PTFE
9	HANDLE	A276 TYPE430(1)
10	HANDLE NUT	STAINLESS STEEL
16A	WASHER	STAINLESS STEEL
16B	NAME PLATE	STAINLESS STEEL
19	GASKET	PTFE
30	BALL SEAT	HYPATITE® PTFE
34	GLAND NUT	STAINLESS STEEL
35	CAP BOLT	STAINLESS STEEL
40	LOCK PLATE	STAINLESS STEEL
43	CONED DISC SPTING	STAINLESS STEEL
47	THRUST WASHER	PTFE(2)
126	STOPPER PIN	A276 TYPE304
A	LATCH LOCK	STAINLESS STEEL

NOTE

(1) Plastic covering.

(2) Stem—to-body grounding optional available.

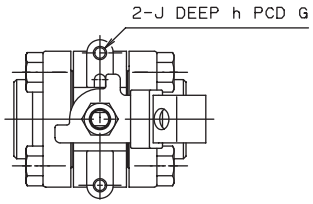

SIZE ¼ - ⅜

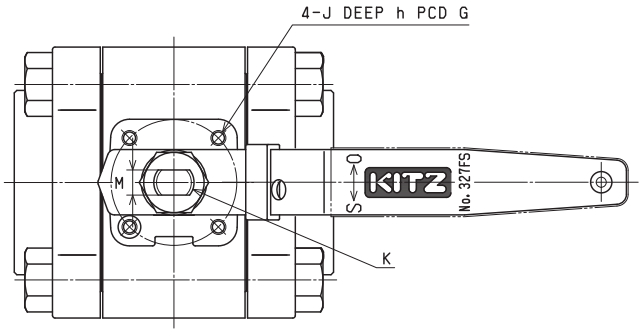

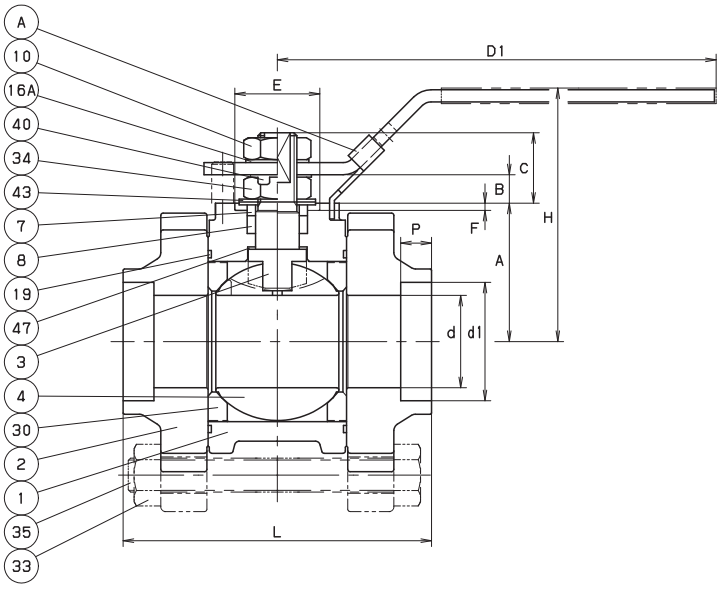

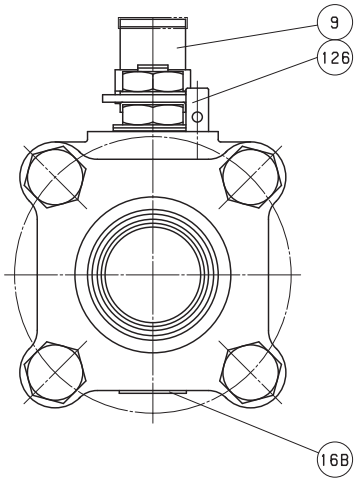

DIMENSIONS

Unit : inch

Nominal Size					Welding End		Mounting Dimensions for Actuator										
in.	d	H	D1	L	d1	P	A	B	C	E	F	G	J	h	K	M	ISO 5211 Flange Type
¼	0.39	1.89	4.72	2.48	0.56	0.38	1.04	0.08	0.41	—	—	1.97	¼-20UNC	0.28	M8	0.20	—
⅜	0.39	1.89	4.72	2.48	0.69	0.38	1.04	0.08	0.41	—	—	1.97	¼-20UNC	0.28	M8	0.20	—
½	0.55	2.36	5.12	2.80	0.86	0.38	1.38	0.17	0.56	0.98	0.12	1.42	¼-20UNC	0.20	M10	0.24	F03
¾	0.75	2.68	5.12	3.54	1.07	0.50	1.69	0.20	0.67	1.18	0.12	1.65	¼-20UNC	0.24	M12	0.34	F04
1	0.94	3.23	5.91	4.06	1.33	0.50	1.73	0.53	1.15	1.18	0.12	1.65	¼-20UNC	0.32	M14	0.39	F04
1¼	1.18	3.46	5.91	4.33	1.68	0.50	1.95	0.53	1.07	1.18	0.12	1.65	¼-20UNC	0.32	M14	0.39	F04
1½	1.50	4.09	7.09	5.00	1.92	0.50	2.24	0.46	1.14	1.38	0.12	1.97	¼-20UNC	0.39	M16	0.39	F05

AWU3TFZM
CODE NO. 327FS

KITZ

MATERIAL LIST

No.	Name of Parts	Materials
1	BODY	A351 Gr. CF8M
2	CAP	A351 Gr. CF8M
3	STEM	A276 TYPE316
4	BALL	A351 Gr. CF8M
7	GLAND	A351 Gr. CF8
8	GLAND PACKING	PTFE
9	HANDLE	DUCTILE IRON
16	NAME PLATE	STAINLESS STEEL
19	GASKET	PTFE
30	BALL SEAT	HYPATITE® PTFE
35	CAP BOLT	A193 Gr. B8
36	GLAND BOLT	A193 Gr. B8
40	KEY LOCK PLATE	STAINLESS STEEL
47	THRUST WASHER	PTFE (1)
48	SNAP RING	STAINLESS STEEL
49	STOPPER	STAINLESS STEEL
123	HANDLE BOLT	STAINLESS STEEL
124	SPRING & PIN	A313 & A276 TYPE316
126	STOPPER PIN	STAINLESS STEEL

NOTE

(1) Stem—to-body grounding optional available.

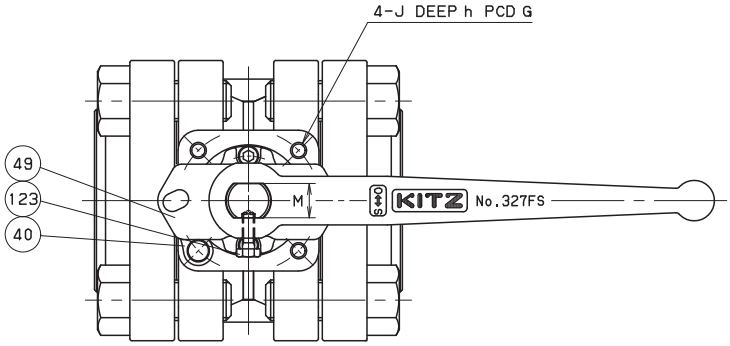

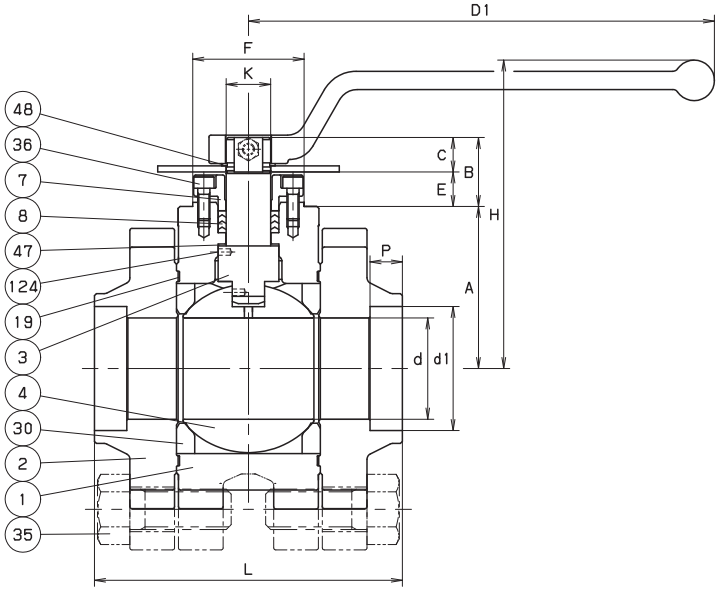

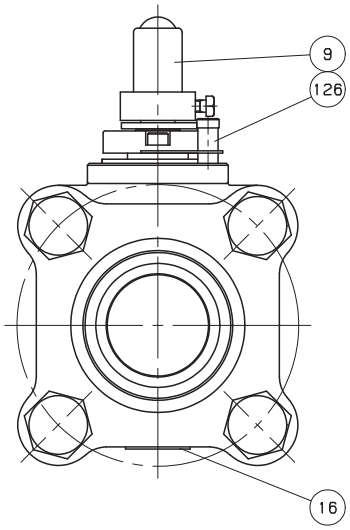

DIMENSIONS

Unit : inch

Nominal Size					Welding End		Mounting Dimensions for Actuator										
in.	d	H	D1	L	d1	P	A	B	C	E	F	K	G	J	h	M	ISO 5211 Flange Type
2	1.97	5.98	9.06	5.98	2.41	0.63	3.15	1.34	0.67	0.67	2.17	0.87	2.76	5/16-18UNC	0.59	0.67	F07

AWU3TFZM-FSO
CODE NO. 329FS-LOH

MATERIAL LIST

No.	Name of Parts	Materials
1	BODY	A351 Gr.CF8M
2	CAP	A351 Gr.CF8M
3	STEM	A276 TYPE316
4	BALL	A276 TYPE316 or A351 Gr,CF8M
7	GLAND	A276 TYPE316
8A	GLAND PACKING	FLEXIBLE GRAFITE
8B	SPACER PACKING	G/F PTFE
9	HANDLE	A276 TYPE430(1)
10	HANDLE NUT	STAINLESS STEEL
16A	WASHER	STAINLESS STEEL
16B	NAME PLATE	STAINLESS STEEL
19	GASKET	PTFE
30	BALL SEAT	HYPATITE® PTFE
34	GLAND NUT	STAINLESS STEEL
35	CAP BOLT	STAINLESS STEEL
40	LOCK PLATE	STAINLESS STEEL
43	CONED DISC SPTING	STAINLESS STEEL
47	THRUST WASHER	C/F PTFE(2) (25%CARBON FILLED)
126	STOPPER PIN	A276 TYPE304
A	LATCH LOCK	STAINLESS STEEL

NOTE

(1) Plastic covering.
(2) All valves have an anti-static thrust washer insuring positive conductivity between body and stem.

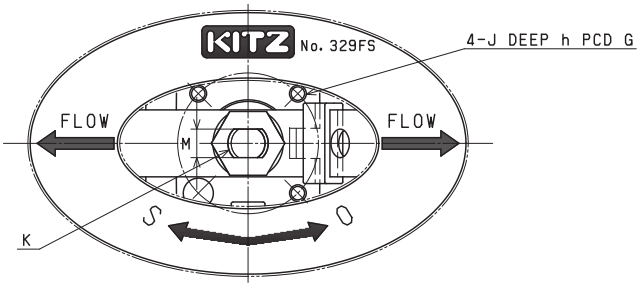

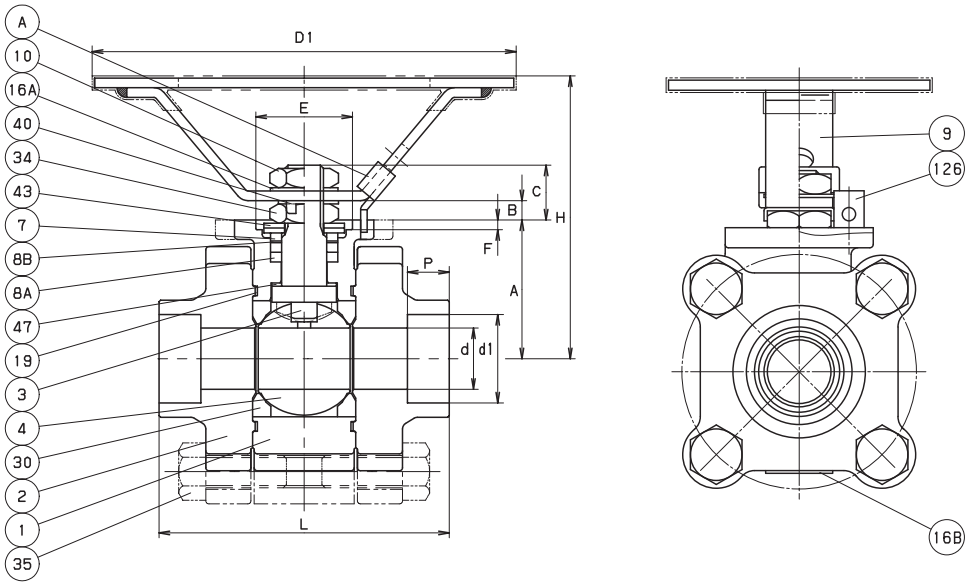

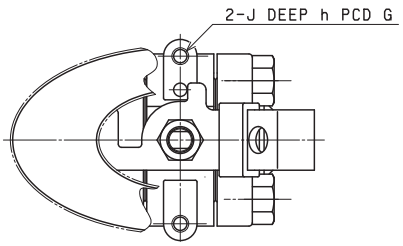

SIZE 1/4 & 3/8

DIMENSIONS

Unit : inch

Nominal Size					Welding End		Mounting Dimensions for Actuator										
in.	d	H	D1	L	d1	P	A	B	C	E	F	G	J	h	K	M	ISO 5211 Flange Type
1/4	0.39	1.89	4.72	2.48	0.56	0.38	1.04	0.08	0.41	—	—	1.97	1/4-20UNC	0.28	M8	0.20	—
3/8	0.39	1.89	4.72	2.48	0.69	0.38	1.04	0.08	0.41	—	—	1.97	1/4-20UNC	0.28	M8	0.20	—
1/2	0.55	2.36	5.12	2.80	0.86	0.38	1.38	0.17	0.56	0.98	0.12	1.42	1/4-20UNC	0.20	M10	0.24	F03
3/4	0.75	2.68	5.12	3.54	1.07	0.50	1.69	0.20	0.67	1.18	0.12	1.65	1/4-20UNC	0.24	M12	0.34	F04
1	0.94	3.23	5.91	4.06	1.33	0.50	1.73	0.53	1.15	1.18	0.12	1.65	1/4-20UNC	0.32	M14	0.39	F04
1 1/4	1.18	3.46	5.91	4.33	1.68	0.50	1.95	0.53	1.07	1.18	0.12	1.65	1/4-20UNC	0.32	M14	0.39	F04
1 1/2	1.50	4.09	7.09	5.00	1.92	0.50	2.24	0.46	1.14	1.38	0.12	1.97	1/4-20UNC	0.39	M16	0.39	F05

AWU3TFZM-FS
CODE NO. 329FS

MATERIAL LIST

No.	Name of Parts	Materials
1	BODY	A351 Gr.CF8M
2	CAP	A351 Gr.CF8M
3	STEM	A276 TYPE316
4	BALL	A276 TYPE316 or A351 Gr,CF8M
7	GLAND	A276 TYPE316
8A	GLAND PACKING	FLEXIBLE GRAFITE
8B	SPACER PACKING	G/F PTFE
9	HANDLE	A276 TYPE430(1)
10	HANDLE NUT	STAINLESS STEEL
16A	WASHER	STAINLESS STEEL
16B	NAME PLATE	STAINLESS STEEL
19	GASKET	PTFE
30	BALL SEAT	HYPATITE® PTFE
34	GLAND NUT	STAINLESS STEEL
35	CAP BOLT	STAINLESS STEEL
40	LOCK PLATE	STAINLESS STEEL
43	CONED DISC SPTING	STAINLESS STEEL
47	THRUST WASHER	C/F PTFE(2) (25%CARBON FILLED)
126	STOPPER PIN	A276 TYPE304
A	LATCH LOCK	STAINLESS STEEL

NOTE

(1) Plastic covering.
(2) All valves have an anti-static thrust washer insuring positive conductivity between body and stem.

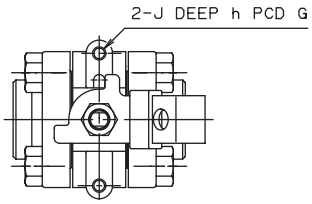

SIZE ¼ - ⅜

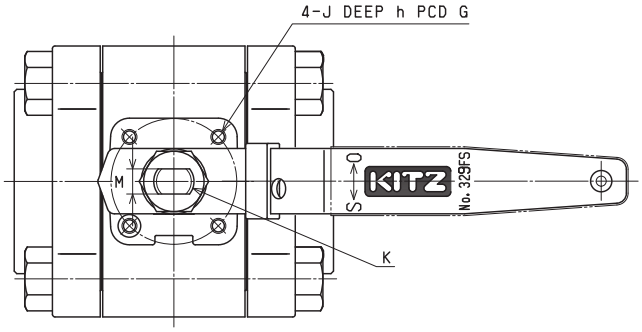

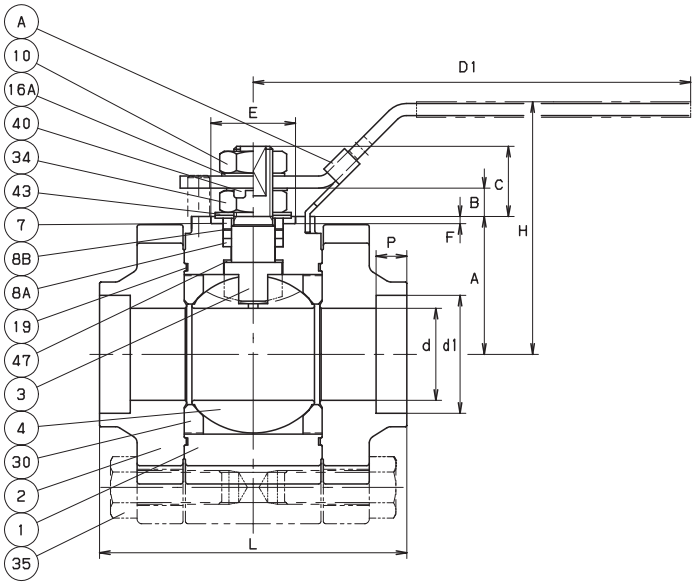

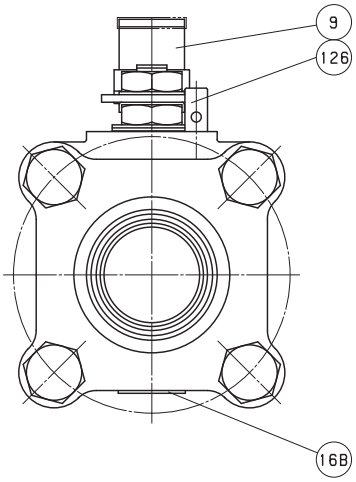

DIMENSIONS

Unit : inch

Nominal Size					Welding End		Mounting Dimensions for Actuator										
in.	d	H	D1	L	d1	P	A	B	C	E	F	G	J	h	K	M	ISO 5211 Flange Type
1/4	0.39	1.89	4.72	2.48	0.56	0.38	1.04	0.08	0.41	—	—	1.97	1/4-20UNC	0.28	M8	0.20	—
3/8	0.39	1.89	4.72	2.48	0.69	0.38	1.04	0.08	0.41	—	—	1.97	1/4-20UNC	0.28	M8	0.20	—
1/2	0.55	2.36	5.12	2.80	0.86	0.38	1.38	0.17	0.56	0.98	0.12	1.42	1/4-20UNC	0.20	M10	0.24	F03
3/4	0.75	2.68	5.12	3.54	1.07	0.50	1.69	0.20	0.67	1.18	0.12	1.65	1/4-20UNC	0.24	M12	0.34	F04
1	0.94	3.23	5.91	4.06	1.33	0.50	1.73	0.53	1.15	1.18	0.12	1.65	1/4-20UNC	0.32	M14	0.39	F04
1 1/4	1.18	3.46	5.91	4.33	1.68	0.50	1.95	0.53	1.07	1.18	0.12	1.65	1/4-20UNC	0.32	M14	0.39	F04
1 1/2	1.50	4.09	7.09	5.00	1.92	0.50	2.24	0.46	1.14	1.38	0.12	1.97	1/4-20UNC	0.39	M16	0.39	F05

AWU3TFZM-FS
CODE NO. 329FS

MATERIAL LIST

No.	Name of Parts	Materials
1	BODY	A351 Gr. CF8M
2	CAP	A351 Gr. CF8M
3	STEM	A276 TYPE316
4	BALL	A351 Gr. CF8M
7	GLAND	A351 Gr. CF8
8 A	GLAND PACKING	FLEXIBLE GRAPHITE
8 B	SPACER PACKING	G/F PTFE
9	HANDLE	DUCTILE IRON
16	NAME PLATE	STAINLESS STEEL
19	GASKET	(2)
30	BALL SEAT	HYPATITE® PTFE
35	CAP BOLT	A193 Gr. B8
36	GLAND BOLT	A193 Gr. B8
40	KEY LOCK PLATE	STAINLESS STEEL
47	THRUST WASHER	25% CARBON FILLED PTFE (1)
48	SNAP RING	STAINLESS STEEL
49	STOPPER	STAINLESS STEEL
123	HANDLE BOLT	STAINLESS STEEL
124	SPRING & PIN	A313 & A276 TYPE316
126	STOPPER PIN	STAINLESS STEEL

NOTE

(1) All valves have an anti-static thrust washer insuring positive conductivity between body and stem.
(2) Stainless foil inserted flexible graphite.

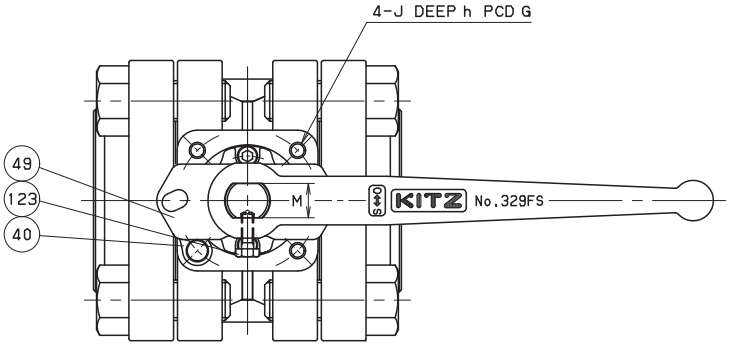

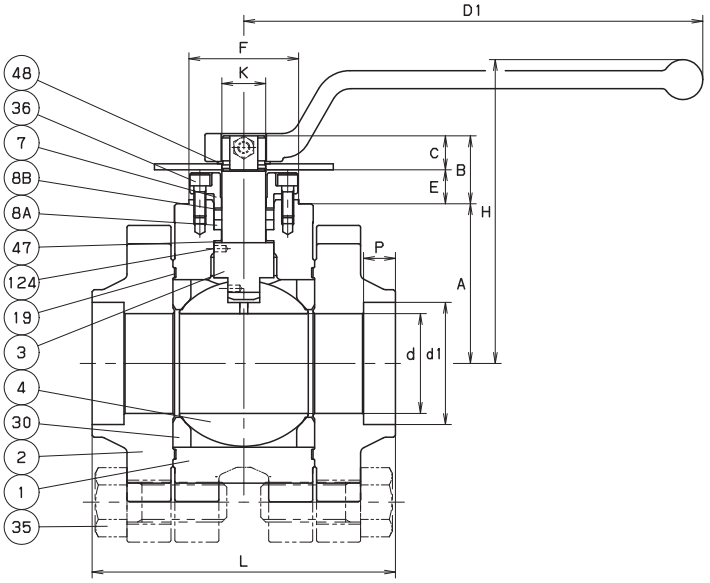

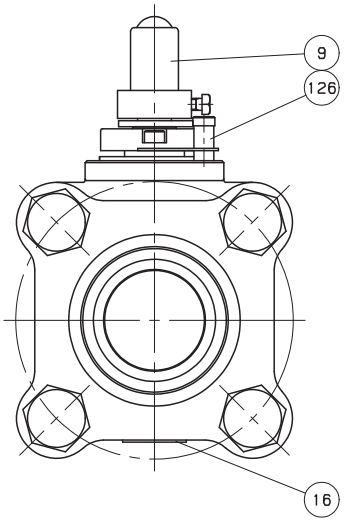

DIMENSIONS

Unit : inch

Nominal Size					Welding End		Mounting Dimensions for Actuator										
in.	d	H	D1	L	d1	P	A	B	C	E	F	K	G	J	h	M	ISO 5211 Flange Type
2	1.97	5.98	9.06	5.98	2.41	0.63	3.15	1.34	0.67	0.67	2.17	0.87	2.76	5/16-18UNC	0.59	0.67	F07

AWU3THZM-O
CODE NO. 327S-LOH

MATERIAL LIST

No.	Name of Parts	Materials
1	BODY	A351 Gr.CF8M
2	CAP	A351 Gr.CF8M
3	STEM	A276 TYPE316
4	BALL	A276 TYPE316 or A351 Gr,CF8M
7	GLAND	A276 TYPE316
8	GLAND PACKING	PTFE
9	HANDLE	A276 TYPE430(1)
10	HANDLE NUT	STAINLESS STEEL
16A	WASHER	STAINLESS STEEL
16B	NAME PLATE	STAINLESS STEEL
19	GASKET	PTFE
30	BALL SEAT	HYPATITE® PTFE
34	GLAND NUT	STAINLESS STEEL
35	CAP BOLT	STAINLESS STEEL
40	LOCK PLATE	STAINLESS STEEL
43	CONED DISC SPTING	STAINLESS STEEL
47	THRUST WASHER	PTFE(2)
126	STOPPER PIN	A276 TYPE304
A	LATCH LOCK	STAINLESS STEEL

NOTE

(1) Plastic covering.

(2) Stem—to-body grounding optional available.

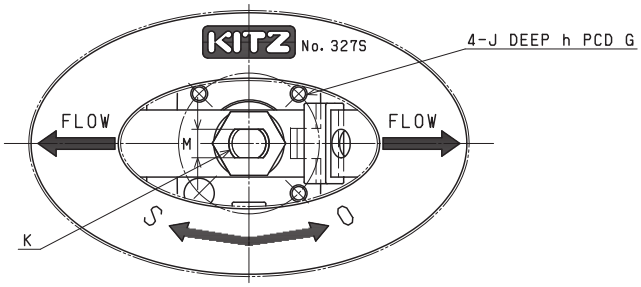

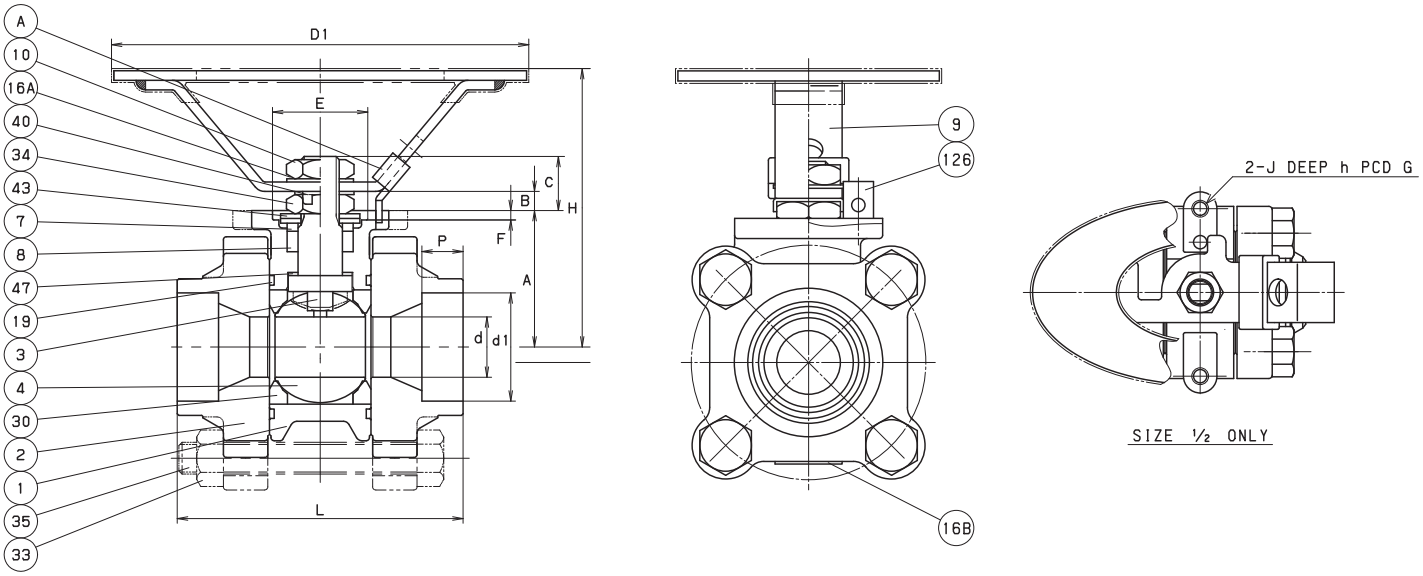

DIMENSIONS

Unit : inch

Nominal Size					Welding End		Mounting Dimensions for Actuator										
in.	d	H	D1	L	d1	P	A	B	C	E	F	G	J	h	K	M	ISO 5211 Flange Type
1/2	0.39	2.48	3.94	2.48	0.86	0.38	1.04	0.08	0.41	—	—	1.97	1/4-20UNC	0.28	M8	0.20	—
3/4	0.55	3.07	5.12	2.80	1.07	0.50	1.38	0.17	0.56	0.98	0.12	1.42	1/4-20UNC	0.20	M10	0.24	F03
1	0.75	3.43	5.12	3.54	1.33	0.50	1.69	0.20	0.67	1.18	0.12	1.65	1/4-20UNC	0.24	M12	0.34	F04
1 1/4	0.94	3.35	7.09	4.06	1.68	0.50	1.73	0.53	1.15	1.18	0.12	1.65	1/4-20UNC	0.32	M14	0.39	F04
1 1/2	1.18	3.58	7.09	4.33	1.92	0.50	1.95	0.53	1.07	1.18	0.12	1.65	1/4-20UNC	0.33	M14	0.39	F04
2	1.50	3.94	7.09	5.00	2.41	0.63	2.24	0.46	1.14	1.38	0.12	1.97	1/4-20UNC	0.39	M16	0.39	F05

AWU3THZM
CODE NO. 327S

MATERIAL LIST

No.	Name of Parts	Materials
1	BODY	A351 Gr.CF8M
2	CAP	A351 Gr.CF8M
3	STEM	A276 TYPE316
4	BALL	A276 TYPE316 or A351 Gr,CF8M
7	GLAND	A276 TYPE316
8	GLAND PACKING	PTFE
9	HANDLE	A276 TYPE430(1)
10	HANDLE NUT	STAINLESS STEEL
16A	WASHER	STAINLESS STEEL
16B	NAME PLATE	STAINLESS STEEL
19	GASKET	PTFE
30	BALL SEAT	HYPATITE® PTFE
34	GLAND NUT	STAINLESS STEEL
35	CAP BOLT	STAINLESS STEEL
40	LOCK PLATE	STAINLESS STEEL
43	CONED DISC SPTING	STAINLESS STEEL
47	THRUST WASHER	PTFE(2)
126	STOPPER PIN	A276 TYPE304
A	LATCH LOCK	STAINLESS STEEL

NOTE

(1) Plastic covering.

(2) Stem—to-body grounding optional available.

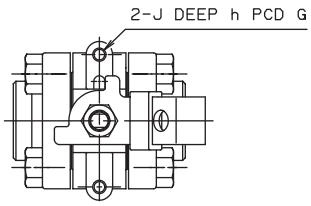

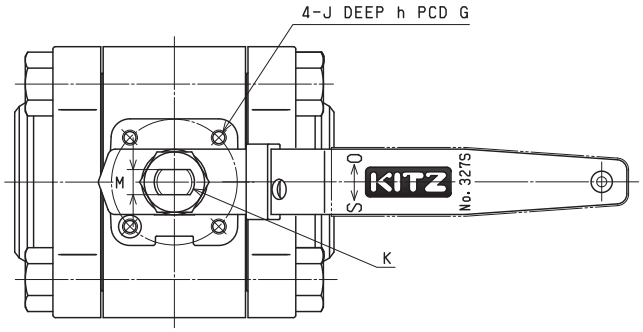

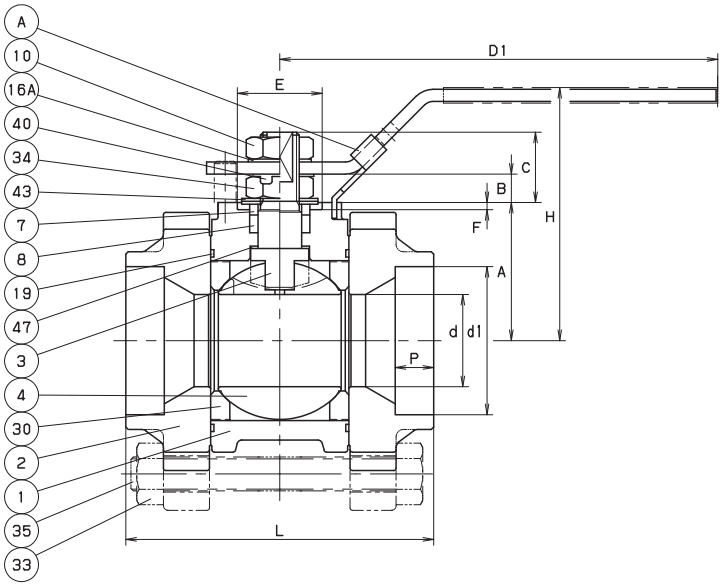

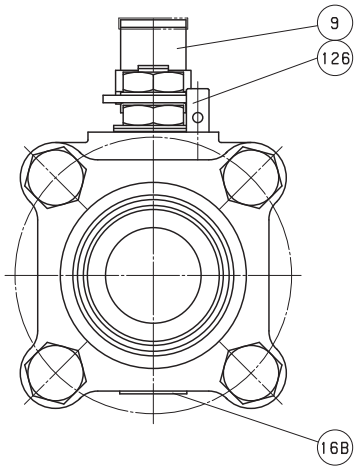

DIMENSIONS

Unit : inch

Nominal Size					Welding End		Mounting Dimensions for Actuator										
in.	d	H	D1	L	d1	P	A	B	C	E	F	G	J	h	K	M	ISO 5211 Flange Type
1/4	0.39	1.89	4.72	2.48	0.56	0.38	1.04	0.08	0.41	—	—	1.97	1/4-20UNC	0.28	M8	0.20	—
3/8	0.39	1.89	4.72	2.48	0.69	0.38	1.04	0.08	0.41	—	—	1.97	1/4-20UNC	0.28	M8	0.20	—
1/2	0.55	2.36	5.12	2.80	0.86	0.38	1.38	0.17	0.56	0.98	0.12	1.42	1/4-20UNC	0.20	M10	0.24	F03
3/4	0.75	2.68	5.12	3.54	1.07	0.50	1.69	0.20	0.67	1.18	0.12	1.65	1/4-20UNC	0.24	M12	0.34	F04
1	0.94	3.23	5.91	4.06	1.33	0.50	1.73	0.53	1.15	1.18	0.12	1.65	1/4-20UNC	0.32	M14	0.39	F04
1 1/4	1.18	3.46	5.91	4.33	1.68	0.50	1.95	0.53	1.07	1.18	0.12	1.65	1/4-20UNC	0.32	M14	0.39	F04
1 1/2	1.50	4.09	7.09	5.00	1.92	0.50	2.24	0.46	1.14	1.38	0.12	1.97	1/4-20UNC	0.39	M16	0.39	F05

AWU3THZM
CODE NO. 327S

KITZ

MATERIAL LIST

No.	Name of Parts	Materials
1	BODY	A351 Gr. CF8M
2	CAP	A351 Gr. CF8M
3	STEM	A276 TYPE316
4	BALL	A351 Gr. CF8M
7	GLAND	A351 Gr. CF8
8	GLAND PACKING	PTFE
9	HANDLE	DUCTILE IRON
16	NAME PLATE	STAINLESS STEEL
19	GASKET	PTFE
30	BALL SEAT	HYPATITE® PTFE
35	CAP BOLT	A193 Gr. B8
36	GLAND BOLT	A193 Gr. B8
40	KEY LOCK PLATE	STAINLESS STEEL
47	THRUST WASHER	PTFE (1)
48	SNAP RING	STAINLESS STEEL
49	STOPPER	STAINLESS STEEL
123	HANDLE BOLT	STAINLESS STEEL
124	SPRING & PIN	A313 & A276 TYPE316
126	STOPPER PIN	STAINLESS STEEL

NOTE

(1) Stem–to-body grounding optional available.

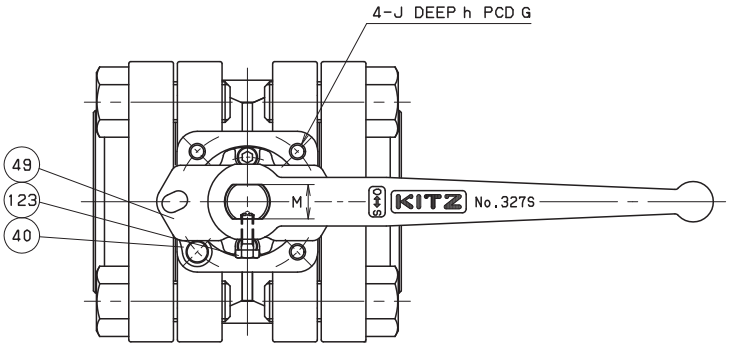

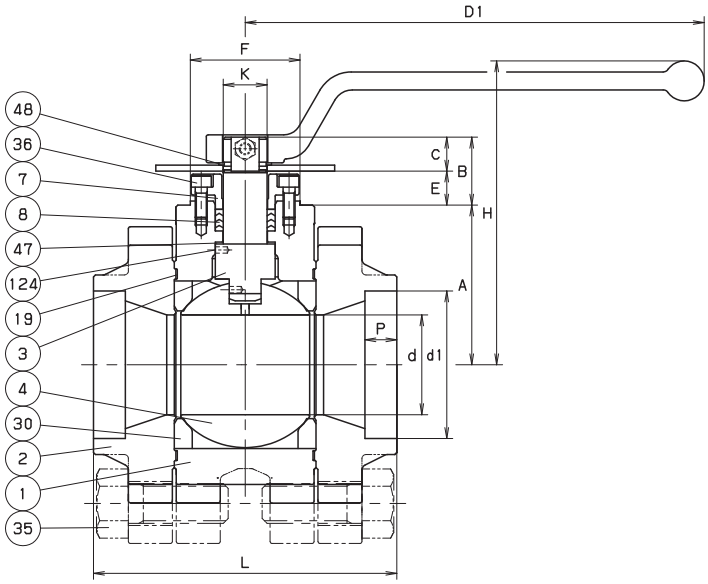

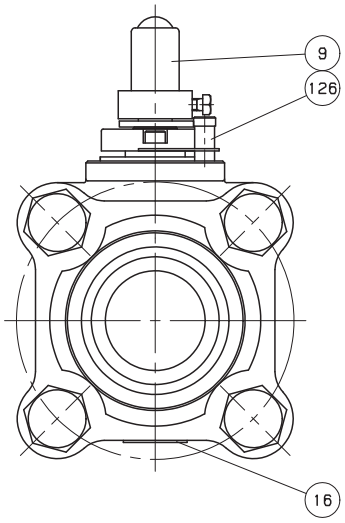

DIMENSIONS

Unit : inch

Nominal Size					Welding End		Mounting Dimensions for Actuator										
in.	d	H	D1	L	d1	P	A	B	C	E	F	K	G	J	h	M	ISO 5211 Flange Type
2 1/2	1.97	5.98	9.06	5.98	2.91	0.63	3.15	1.34	0.67	0.67	2.17	0.87	2.76	5/16-18UNC	0.59	0.67	F07

AWU3THZM-FSO
CODE NO. 329S-LOH

KITZ HYPATITE PTFE®

MATERIAL LIST

No.	Name of Parts	Materials
1	BODY	A351 Gr.CF8M
2	CAP	A351 Gr.CF8M
3	STEM	A276 TYPE316
4	BALL	A276 TYPE316 or A351 Gr,CF8M
7	GLAND	A276 TYPE316
8A	GLAND PACKING	FLEXIBLE GRAFITE
8B	SPACER PACKING	G/F PTFE
9	HANDLE	A276 TYPE430(1)
10	HANDLE NUT	STAINLESS STEEL
16A	WASHER	STAINLESS STEEL
16B	NAME PLATE	STAINLESS STEEL
19	GASKET	FLEXIBLE GRAFITE
30	BALL SEAT	HYPATITE® PTFE
34	GLAND NUT	STAINLESS STEEL
35	CAP BOLT	STAINLESS STEEL
40	LOCK PLATE	STAINLESS STEEL
43	CONED DISC SPTING	STAINLESS STEEL
47	THRUST WASHER	C/F PTFE(2) (25%CARBON FILLED)
126	STOPPER PIN	A276 TYPE304
A	LATCH LOCK	STAINLESS STEEL

NOTE

(1) Plastic covering.
(2) All valves have an anti-static thrust washer insuring positive conductivity between body and stem.

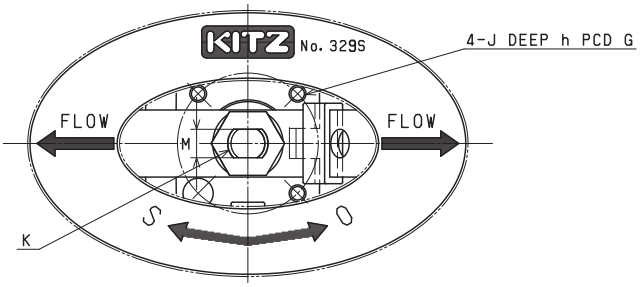

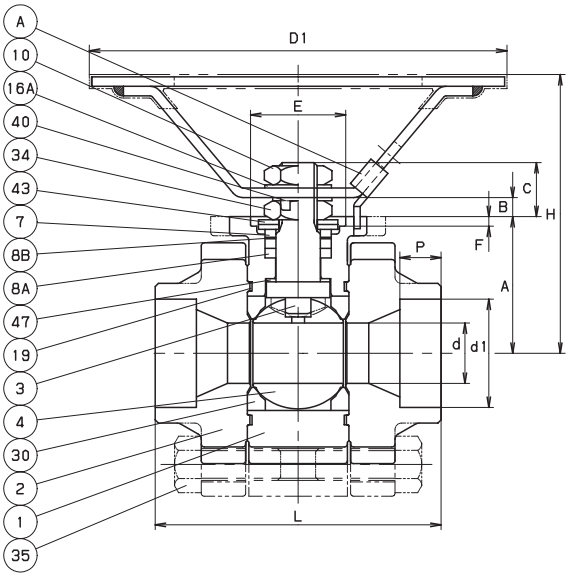

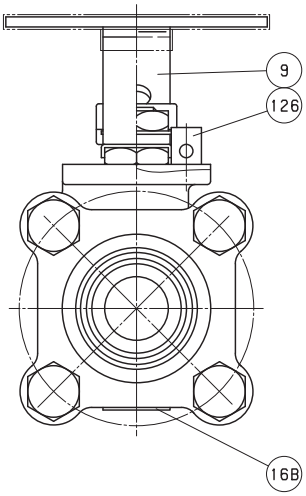

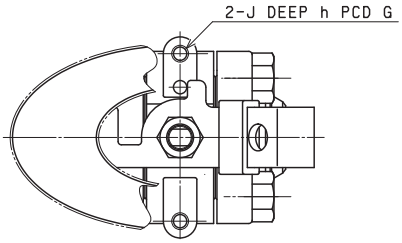

SIZE ½ ONLY

DIMENSIONS

Unit : inch

Nominal Size					Welding End		Mounting Dimensions for Actuator										
in.	d	H	D1	L	d1	P	A	B	C	E	F	G	J	h	K	M	ISO 5211 Flange Type
1/2	0.39	2.48	3.94	2.48	0.86	0.38	1.04	0.08	0.41	—	—	1.97	1/4-20UNC	0.28	M8	0.20	—
3/4	0.55	3.07	5.12	2.80	1.07	0.50	1.38	0.17	0.56	0.98	0.12	1.42	1/4-20UNC	0.20	M10	0.24	F03
1	0.75	3.43	5.12	3.54	1.33	0.50	1.69	0.20	0.67	1.18	0.12	1.65	1/4-20UNC	0.24	M12	0.34	F04
1 1/4	0.94	3.35	7.09	4.06	1.68	0.50	1.73	0.53	1.15	1.18	0.12	1.65	1/4-20UNC	0.32	M14	0.39	F04
1 1/2	1.18	3.58	7.09	4.33	1.92	0.50	1.95	0.53	1.07	1.18	0.12	1.65	1/4-20UNC	0.33	M14	0.39	F04
2	1.50	3.94	7.09	5.00	2.41	0.63	2.24	0.46	1.14	1.38	0.12	1.97	1/4-20UNC	0.39	M16	0.39	F05

AWU3THZM-FS
CODE NO. 329S

KITZ

MATERIAL LIST

No.	Name of Parts	Materials
1	BODY	A351 Gr.CF8M
2	CAP	A351 Gr.CF8M
3	STEM	A276 TYPE316
4	BALL	A276 TYPE316 or A351 Gr,CF8M
7	GLAND	A276 TYPE316
8A	GLAND PACKING	FLEXIBLE GRAFITE
8B	SPACER PACKING	G/F PTFE
9	HANDLE	A276 TYPE430(1)
10	HANDLE NUT	STAINLESS STEEL
16A	WASHER	STAINLESS STEEL
16B	NAME PLATE	STAINLESS STEEL
19	GASKET	FLEXIBLE GRAFITE
30	BALL SEAT	HYPATITE® PTFE
34	GLAND NUT	STAINLESS STEEL
35	CAP BOLT	STAINLESS STEEL
40	LOCK PLATE	STAINLESS STEEL
43	CONED DISC SPTING	STAINLESS STEEL
47	THRUST WASHER	C/F PTFE(2) (25%CARBON FILLED)
126	STOPPER PIN	A276 TYPE304
A	LATCH LOCK	STAINLESS STEEL

NOTE

(1) Plastic covering.

(2) All valves have an anti-static thrust washer insuring positive conductivity between body and stem.

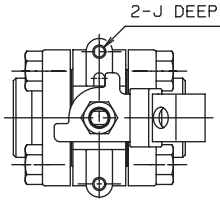

SIZE 1/2 ONLY

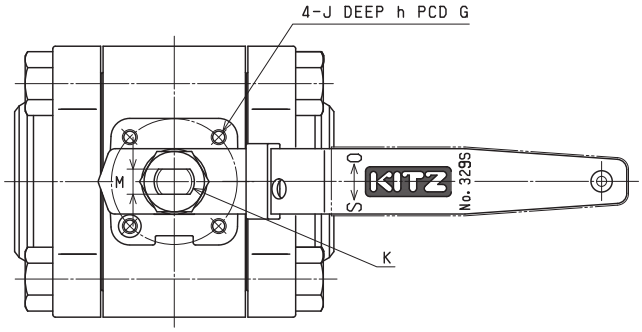

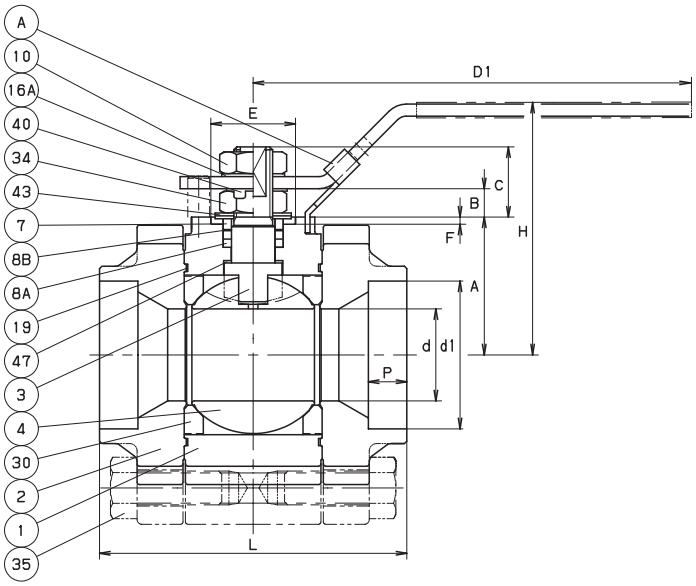

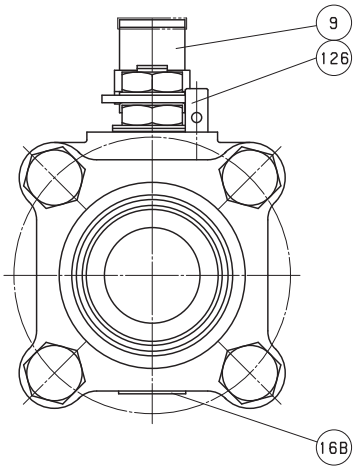

DIMENSIONS

Unit : inch

Nominal Size					Welding End		Mounting Dimensions for Actuator										
in.	d	H	D1	L	d1	P	A	B	C	E	F	G	J	h	K	M	ISO 5211 Flange Type
1/2	0.39	1.89	4.72	2.48	0.86	0.38	1.04	0.08	0.41	—	—	1.97	1/4-20UNC	0.28	M8	0.20	—
3/4	0.55	2.36	5.12	2.80	1.07	0.50	1.38	0.17	0.56	0.98	0.12	1.42	1/4-20UNC	0.20	M10	0.24	F03
1	0.75	2.68	5.12	3.54	1.33	0.50	1.69	0.20	0.67	1.18	0.12	1.65	1/4-20UNC	0.24	M12	0.34	F04
1 1/4	0.94	3.23	5.91	4.06	1.68	0.50	1.73	0.53	1.15	1.18	0.12	1.65	1/4-20UNC	0.32	M14	0.39	F04
1 1/2	1.18	3.46	5.91	4.33	1.92	0.50	1.95	0.53	1.07	1.18	0.12	1.65	1/4-20UNC	0.33	M14	0.39	F04
2	1.50	4.09	7.09	5.00	2.41	0.63	2.24	0.46	1.14	1.38	0.12	1.97	1/4-20UNC	0.39	M16	0.39	F05

AWU3THZM-FS
CODE NO. 329S

MATERIAL LIST

No.	Name of Parts	Materials
1	BODY	A351 Gr. CF8M
2	CAP	A351 Gr. CF8M
3	STEM	A276 TYPE316
4	BALL	A351 Gr. CF8M
7	GLAND	A351 Gr. CF8
8 A	GLAND PACKING	FLEXIBLE GRAPHITE
8 B	SPACER PACKING	G/F PTFE
9	HANDLE	DUCTILE IRON
16	NAME PLATE	STAINLESS STEEL
19	GASKET	(2)
30	BALL SEAT	HYPATITE® PTFE
35	CAP BOLT	STAINLESS STEEL
36	GLAND BOLT	STAINLESS STEEL
40	KEY LOCK PLATE	STAINLESS STEEL
47	THRUST WASHER	25% CARBON FILLED PTFE (1)
48	SNAP RING	STAINLESS STEEL
49	STOPPER	STAINLESS STEEL
123	HANDLE BOLT	STAINLESS STEEL
124	SPRING & PIN	A313 & A276 TYPE316
126	STOPPER PIN	STAINLESS STEEL

NOTE

(1) All valves have an anti-static thrust washer insuring positive conductivity between body and stem.

(2) Stainless foil inserted flexible graphite.

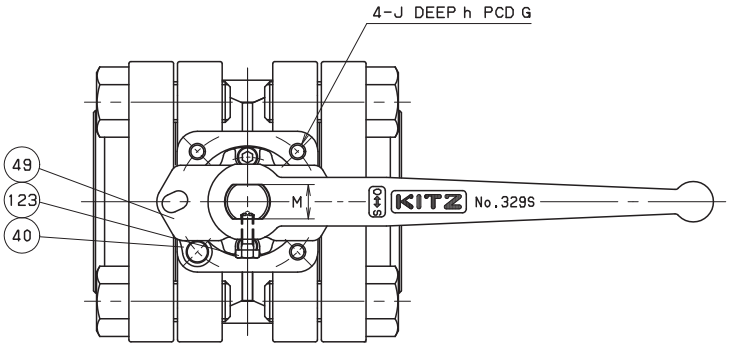

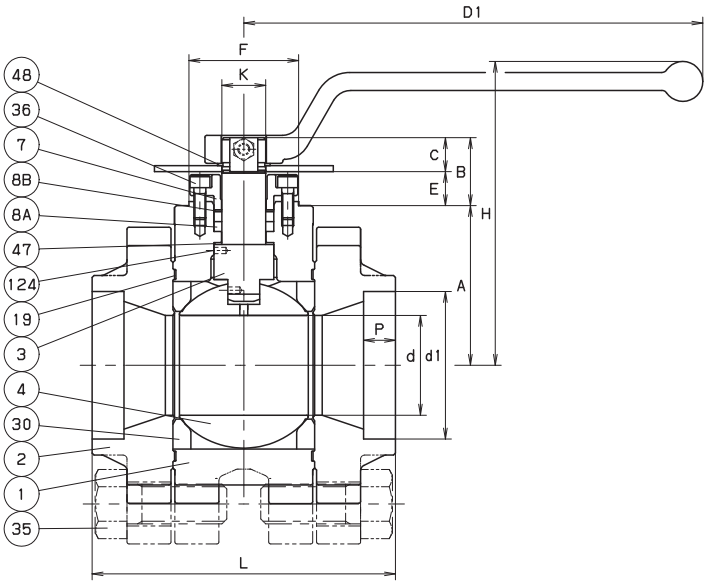

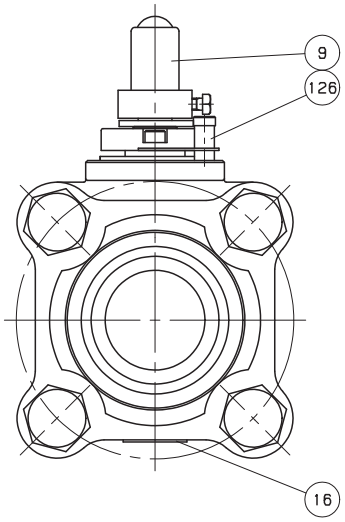

DIMENSIONS

Unit : inch

Nominal Size					Welding End		Mounting Dimensions for Actuator										
in.	d	H	D1	L	d1	P	A	B	C	E	F	K	G	J	h	M	ISO 5211 Flange Type
2 1/2	1.97	5.98	9.06	5.98	2.91	0.63	3.15	1.34	0.67	0.67	2.17	0.87	2.76	5/16-18UNC	0.59	0.67	F07

Dimensions of ISO 5211 Actuator Mounting Pad for Class 150 / 300 Full Port, Split Body, Side Entry Design Ball Valves

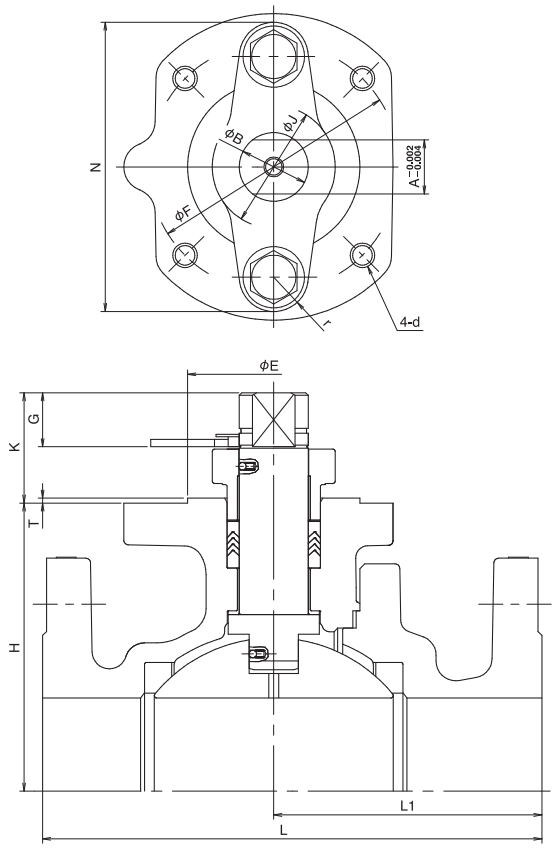

DIMENSIONS

Unit: inch

Class	Nominal size (in.)	-0.002 -0.004 L	L1	A	ϕB	ϕE	ϕF	G	ϕJ	H	K	N	T	d M thread	r	ISO 5211 Flange Type
150	1/2	4.25	2.50	0.355	0.47	0.99	1.42	0.35	0.79	1.57	0.87	1.93	0.04	M5	0.24	F03
	3/4	4.62	2.74	0.355	0.47	0.99	1.42	0.35	0.79	1.69	0.87	1.93	0.04	M5	0.24	F03
	1	5.00	3.07	0.552	0.71	1.38	1.97	0.55	1.18	2.24	1.18	2.60	0.06	M6	0.32	F05
	1 1/2	6.50	3.86	0.670	0.87	2.17	2.76	0.67	1.58	2.80	1.34	3.55	0.06	M8	0.45	F07
	2	7.00	4.13	0.670	0.87	2.17	2.76	0.67	1.58	3.15	1.34	3.55	0.06	M8	0.45	F07
	2 1/2	7.50	4.13	0.867	1.10	2.76	4.02	0.87	1.97	4.25	1.77	4.65	0.08	M10	0.55	F10
	3	8.00	4.29	0.867	1.10	2.76	4.02	0.87	1.97	4.63	1.77	4.65	0.08	M10	0.55	F10
	4	9.00	4.69	1.063	1.42	3.35	4.92	1.06	2.44	5.75	2.05	5.56	0.08	M12	0.69	F12
	5	14.00	8.11	1.063	1.42	3.35	4.92	1.06	2.44	6.38	2.05	5.56	0.08	M12	0.69	F12
	6	15.50	8.62	1.418	1.89	3.40	5.51	1.42	3.07	7.68	2.48	6.26	0.08	M16	0.69	F14
	8	18.00	9.33	1.811	2.36	5.12	6.50	1.81	3.62	9.92	3.11	8.15	0.08	M20	0.87	F16
	10	21.00	10.49	1.811	2.36	5.12	6.50	1.81	3.62	11.44	3.11	8.15	0.08	M20	0.87	F16
300	1/2	5.50	3.23	0.355	0.47	0.99	1.42	0.35	0.79	1.57	0.87	1.93	0.04	M5	0.24	F03
	3/4	6.00	3.43	0.355	0.47	0.99	1.42	0.35	0.79	1.69	0.87	1.93	0.04	M5	0.24	F03
	1	6.50	3.78	0.552	0.71	1.38	1.97	0.55	1.18	2.24	1.18	2.60	0.06	M6	0.32	F05
	1 1/2	7.50	4.33	0.670	0.87	2.17	2.76	0.67	1.58	2.80	1.34	3.55	0.06	M8	0.45	F07
	2	8.50	5.00	0.670	0.87	2.17	2.76	0.67	1.58	3.15	1.34	3.55	0.06	M8	0.45	F07
	2 1/2	9.50	5.35	0.867	1.10	2.76	4.02	0.87	1.97	4.25	1.77	4.65	0.08	M10	0.55	F10
	3	11.12	5.83	0.867	1.10	2.76	4.02	0.87	1.97	4.63	1.77	4.65	0.08	M10	0.55	F10
	4	12.00	6.38	1.063	1.42	3.35	4.92	1.06	2.44	5.75	2.05	5.56	0.08	M12	0.69	F12
	6	15.88	8.39	1.418	1.89	3.40	5.51	1.42	3.07	7.68	2.48	6.26	0.08	M16	0.69	F14
	8	19.75	9.88	1.811	2.36	5.12	6.50	1.81	3.62	9.92	3.11	8.15	0.08	M20	0.87	F16

***KITZ product codes :**
(1) 150SCTDZM(-FS)
(2) 300SCTDZM(-FS)
(3) 150UTDZM(-FS)
(4) 300 SCTDZM(-FS)

Note : Dimension of stem head are in accordance with CPAI ADDS 2.02, but the maximum specified dimension in CAPI ADDS 2.02 is "F14". For NPS 8 and 10, mounting pads are F16/ISO5211.

Dimensions of ISO 5211 Actuator Mounting Pad for Class 150 / 300 Single Reduced Bore, Uni-body, End Entry Design Ball Valves

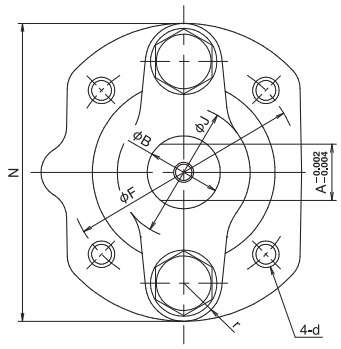

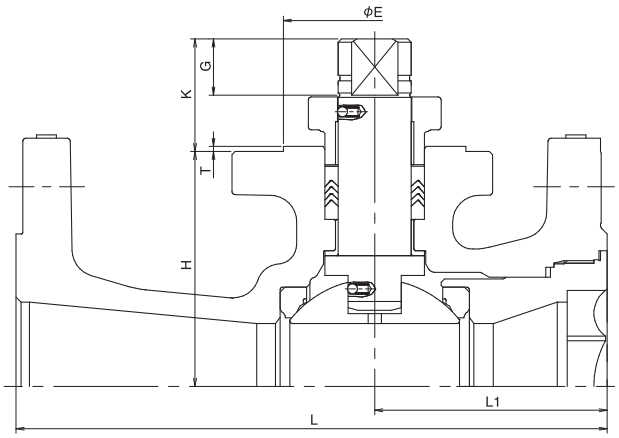

DIMENSIONS

Unit: inch

Class	Nominal size (in.)	-0.0008 -0.0024 L	L1	A	ϕB	ϕE	ϕF	G	ϕJ	H	K	N	T	d M thread	r	ISO 5211 Flange Type
150	1/2	4.25	2.13	0.276	0.39	0.99	1.42	0.33	0.79	1.10	0.71	1.89	0.04	M5	0.24	F03(1)
	3/4	4.62	2.20	0.276	0.39	0.99	1.42	0.33	0.79	1.18	0.71	1.89	0.04	M5	0.24	F03(1)
	1	5.00	2.11	0.355	0.47	0.99	1.42	0.35	1.18	1.63	0.87	1.93	0.04	M5	0.24	F03
	1 1/2	6.50	2.28	0.552	0.71	1.38	1.97	0.55	1.58	2.36	1.18	2.60	0.06	M6	0.32	F05
	2	7.00	2.76	0.670	0.87	2.17	2.76	0.67	1.58	2.80	1.34	3.55	0.06	M8	0.45	F07
	3	8.00	3.46	0.867	1.10	2.76	4.02	0.87	1.97	4.00	1.77	4.65	0.08	M10	0.55	F10
	4	9.00	3.98	0.867	1.10	2.76	4.02	0.87	1.97	4.63	1.77	4.65	0.08	M10	0.55	F10
	6	10.50	4.57	1.063	1.42	3.35	4.92	1.06	2.44	5.75	2.05	5.56	0.08	M12	0.69	F12
	8	11.50	5.16	1.418	1.89	3.40	5.51	1.42	3.07	7.68	2.48	6.26	0.08	M16	0.69	F14
	10	13.00	6.46	1.811	2.36	5.12	6.50	1.81	3.62	9.37	3.11	8.15	0.08	M20	0.87	F16
300	1/2	5.50	2.36	0.276	0.39	0.99	1.42	0.33	0.79	1.10	0.71	1.89	0.04	M5	0.24	F03(1)
	3/4	6.00	2.54	0.376	0.39	0.99	1.42	0.33	0.79	1.18	0.71	1.89	0.04	M5	0.24	F03(1)
	1	6.50	2.44	0.355	0.47	0.99	1.42	0.35	0.79	1.63	0.87	1.93	0.06	M5	0.24	F03
	1 1/2	7.50	2.76	0.552	0.71	1.38	1.97	0.55	1.18	2.36	1.18	2.60	0.06	M6	0.32	F05
	2	8.50	3.54	0.670	0.87	2.17	2.76	0.67	1.58	2.80	1.34	3.55	0.08	M8	0.45	F07
	3	11.12	4.29	0.867	1.10	2.76	4.02	0.87	1.97	4.00	1.77	4.65	0.08	M10	0.55	F10
	4	12.00	4.55	0.867	1.10	2.76	4.02	0.87	1.97	4.63	1.77	4.65	0.08	M10	0.55	F10
	6	15.88	6.38	1.063	1.42	3.35	4.92	1.06	2.44	5.75	2.05	5.56	0.08	M12	0.69	F12
	8	16.50	5.73	1.418	1.89	3.40	5.51	1.42	3.07	7.68	2.48	6.26	0.08	M16	0.69	F14
	10	18.00	6.77	1.811	2.36	5.12	6.50	1.81	3.62	9.37	3.11	8.15	0.08	M20	0.87	F16

***These dimensions are specified as F03S by CAPI.**
***KITZ product codes :**
(1) 150SCTAZM(-FS)
(2) 300SCTAZM(-FS)
(3) 150UTAZM(-FS)
(4) 300 SCTAZM(-FS)

Construction and Materials

No.	Parts		Standard	Super-firesafe
			150SCTDZM 300SCTDZM	150SCTDZM-FS 300SCTDZM-FS
1	BODY		A216 Gr. WCB*1	
2	BODY CAP		A216 Gr. WCB	
3	STEM		A276 TYPE316*2	
4	BALL		A276 TYPE316*2 or A351 Gr. CF8M	
7	GLAND		A351 Gr. CF8	
8	GLAND PACKIING		PTFE	FLEXIBLE GRAPHITE
9	HANDLE		DUCTILE IRON	
9 A	HANDLE BAR*3		CARBON STEEL	
9 B	HANDLE HEAD		DUCTILE IRON	
16	NAME PLATE		A276 TYPE304	
19	GASKET		PTFE	FLEXIBLE GRAPHITE
20	PACKING WASHER	1/2"~1"	A276 TYPE316L	
30	BALL SEAT		HYPATITE® PTFE	
33	CAP NUT		A194 Gr. 2HM	
35	CAP BOLT		A193 Gr. B7M	
36	GLAND BOLT		STAINLESS STEEL	
40	KEYLOCK PLATE		A276 TYPE304	
43	HANDLELOCK PLATE		A276 TYPE304	
48	SNAP RING		A276 TYPE304	
49	STOPPER		A276 TYPE304	
51	STOPPER PLATE		A276 TYPE304	
57	GLAND BUSHING		G/F PTFE	
58	GLAND WASHER		A276 TYPE304	
67 A	STEM BEARING		G/F PTFE	
123 B	HANDLELOCK PLATE BOLT		STAINLESS STEEL	
123	HANDLE BOLT		STAINLESS STEEL	
124	SPRING & PIN		A313 & A276 TYPE316	
126	STOPPER PLATE BOLT		STAINLESS STEEL	
145	CONED DISC SPRINGS		Inconel® 718 or Equivalent	

*1. A352 low-temperature service materials are optionally available.
*2. CF8 or Type 304 is optionally available for balls & stems.
*3. Bar type handles are used for 6" & 8" Class 150 / 4" & over Class 300.
All part numbers are corresponding with those shown in valve assembly drawings.

■ Standard material configuration can be applied to sour service.

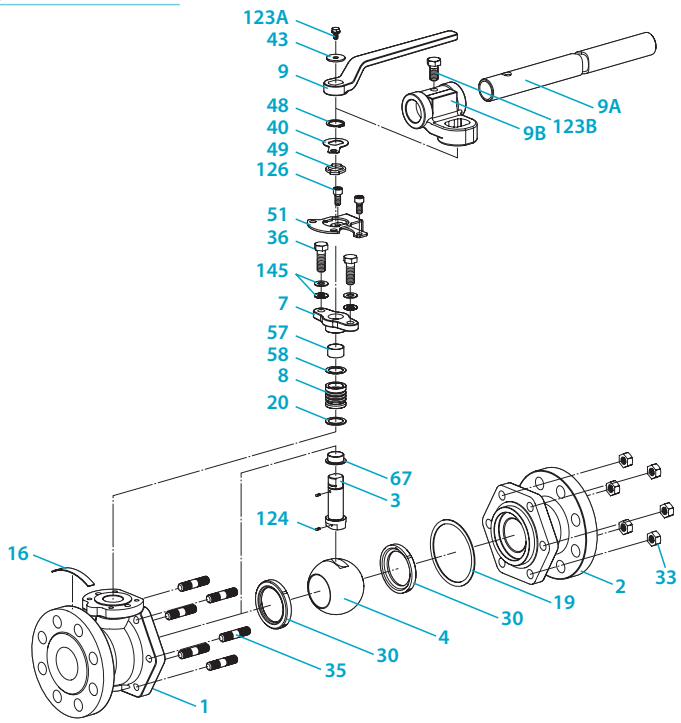

No.	Parts		Standard	Super-firesafe
			150SCTAZM 300SCTAZM	150SCTAZM-FS 300SCTAZM-FS
1	BODY		A216 Gr. WCB*1	
3	STEM		A276 TYPE316*2	
4	BALL		A276 TYPE316*2 or A351 Gr. CF8M	
7	GLAND		A351 Gr. CF8	
8	GLAND PACKIING		PTFE	FLEXIBLE GRAPHITE
9	HANDLE		DUCTILE IRON	
9A	HANDLE BAR*3		CARBON STEEL	
9B	HANDLE HEAD		DUCTILE IRON	
16A	NAME PLATE		STAINLESS STEEL	
16B	LEV PLATE		STAINLESS STEEL	
19A	GASKET		PTFE	
19B	GASKET			FLEXIBLE GRAPHITE
20	PACKING WASHER	1/2"~1 1/2"	A276 TYPE316L	
29	INSERT		A216 Gr. WCB or A105N	
30	BALL SEAT		HYPATITE® PTFE	
36	GLAND BOLT		STAINLESS STEEL	
40	KEYLOCK PLATE		STAINLESS STEEL	
43	HANDLELOCK PLATE		STAINLESS STEEL	
48	SNAP RING		STAINLESS STEEL	
49	STOPPER		STAINLESS STEEL	
51	STOPPER PLATE		STAINLESS STEEL	
57	GLAND BUSHING		G/F PTFE	
58	GLAND WASHER		A276 TYPE304	
67	STEM BEARING		G/F PTFE	
123A	HANDLELOCK PLATE BOLT		STAINLESS STEEL	
123B	HANDLE BOLT		STAINLESS STEEL	
124	SPRING & PIN		A313 & A276 TYPE316	
126	STOPPER PLATE BOLT		STAINLESS STEEL	
145	CONED DISC SPRINGS		INCONEL® 718 or EQUIVALENT	
216A	CE PLATE		STAINLESS STEEL	
216B	ATEX PLATE		STAINLESS STEEL	

*1. A352 low-temperature service materials are optionally available.
*2. CF8 or Type 304 is optionally available for balls & stems.
*3. Bar type handles are used for 8" & 10" Class 150 / 4" & 6" & over Class 300.
All part numbers are corresponding with those shown in valve assembly drawings.

■ Standard material configuration can be applied to sour service.

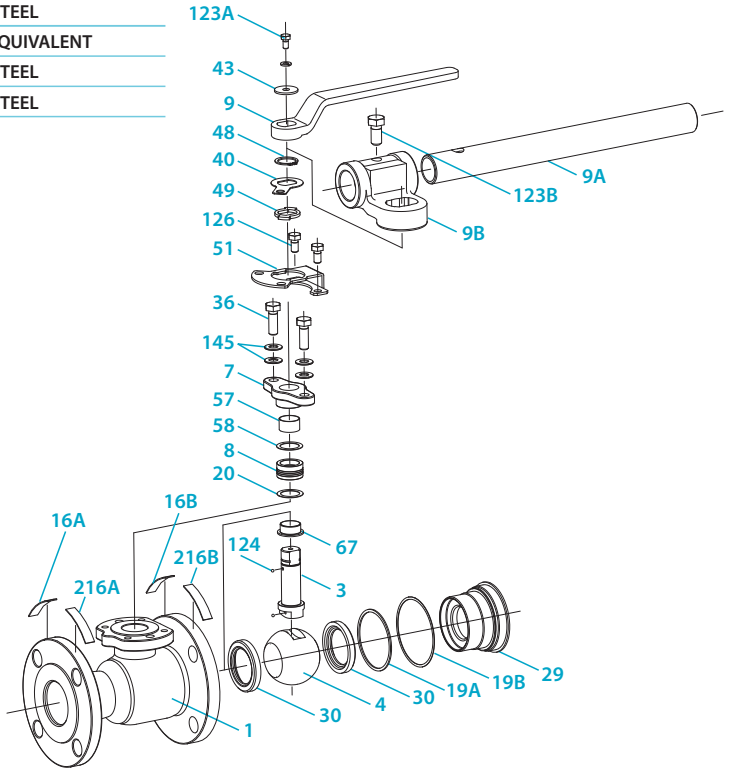

Construction and Materials

No.	Parts		Standard	Super-firesafe
			150UTDZM 300UTDZM	150UTDZM-FS 300UTDZM-FS
1	BODY		A351 Gr. CF8M*1	
2	BODY CAP		A351 Gr. CF8M	
3	STEM		A276 TYPE316	
4	BALL		A276 TYPE316 or A351 Gr. CF8M	
7	GLAND		A351 Gr. CF8	
8	GLAND PACKIING		PTFE	FLEXIBLE GRAPHITE
9	HANDLE		DUCTILE IRON	
9 A	HANDLE BAR*2		CARBON STEEL	
9 B	HANDLE HEAD		DUCTILE IRON	
16	NAME PLATE		A276 TYPE304	
19	GASKET		PTFE	FLEXIBLE GRAPHITE
20	PACKING WASHER	1/2"~1"	A276 TYPE316L	
30	BALL SEAT		HYPATITE® PTFE	
33	CAP NUT		A194 Gr. 8M	
35	CAP BOLT		A193 Gr. B8M	
36	GLAND BOLT		STAINLESS STEEL	
40	KEYLOCK PLATE		A276 TYPE304	
43	HANDLELOCK PLATE		A276 TYPE304	
48	SNAP RING		A276 TYPE304	
49	STOPPER		A276 TYPE304	
51	STOPPER PLATE		A276 TYPE304	
57	GLAND BUSHING		G/F PTFE	
58	GLAND WASHER		A276 TYPE304	
67 A	STEM BEARING		G/F PTFE	
123 B	HANDLELOCK PLATE BOLT		STAINLESS STEEL	
123	HANDLE BOLT		STAINLESS STEEL	
124	SPRING & PIN		A313 & A276 TYPE316	
126	STOPPER PLATE BOLT		STAINLESS STEEL	
145	CONED DISC SPRINGS		Inconel® 718 or Equivalent	

*1. Other stainless steels are optionally available.
*2. Bar type handles are used for 6" & 8" Class 150 / 4" & over Class 300.
All part numbers are corresponding with those shown in valve assembly drawings.

■ Standard material configuration can be applied to sour service.

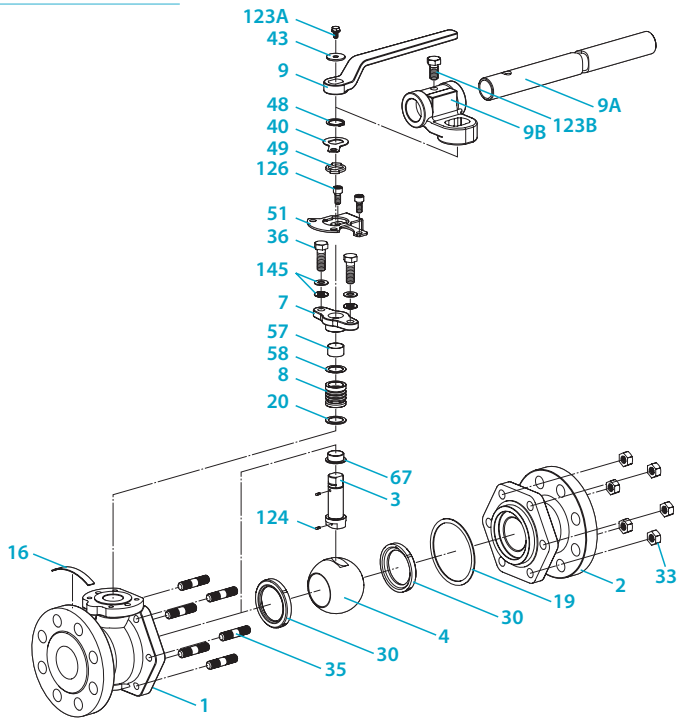

No.	Parts		Standard 150UTAZM 300UTAZM	Super-firesafe 150UTAZM-FS 300UTAZM-FS
1	BODY		A351 Gr. CF8M*1	
3	STEM		A276 TYPE316*2	
4	BALL		A276 TYPE316*2 or A351 Gr. CF8M	
7	GLAND		A351 Gr. CF8	
8	GLAND PACKIING		PTFE	FLEXIBLE GRAPHITE
9	HANDLE		DUCTILE IRON	
9A	HANDLE BAR*3		CARBON STEEL	
9B	HANDLE HEAD		DUCTILE IRON	
16A	NAME PLATE		STAINLESS STEEL	
16B	LEV PLATE		STAINLESS STEEL	
19A	GASKET		PTFE	
19B	GASKET			FLEXIBLE GRAPHITE
20	PACKING WASHER	1/2"~1 1/2"	A276 TYPE316L	
29	INSERT		A216 Gr. WCB or A105N	
30	BALL SEAT		HYPATITE® PTFE	
33	CAP NUT		A194 Gr. 8M	
36	GLAND BOLT		STAINLESS STEEL	
40	KEYLOCK PLATE		STAINLESS STEEL	
43	HANDLELOCK PLATE		STAINLESS STEEL	
48	SNAP RING		STAINLESS STEEL	
49	STOPPER		STAINLESS STEEL	
51	STOPPER PLATE		STAINLESS STEEL	
57	GLAND BUSHING		G/F PTFE	
58	GLAND WASHER		A276 TYPE304	
67	STEM BEARING		G/F PTFE	
123A	HANDLELOCK PLATE BOLT		STAINLESS STEEL	
123B	HANDLE BOLT		STAINLESS STEEL	
124	SPRING & PIN		A313 & A276 TYPE316	
126	STOPPER PLATE BOLT		STAINLESS STEEL	
145	CONED DISC SPRINGS		INCONEL® 718 or EQUIVALENT	
216A	CE PLATE		STAINLESS STEEL	
216B	ATEX PLATE		STAINLESS STEEL	

*1. Other stainless steels are optionally available.
*2. CF8 or Type 304 is optionally available for balls & stems.
*3. Bar type handles are used for 8" & 10" Class 150 / 6" & over Class 300.
All part numbers are corresponding with those shown in valve assembly drawings.

■ Standard material configuration can be applied to sour service.

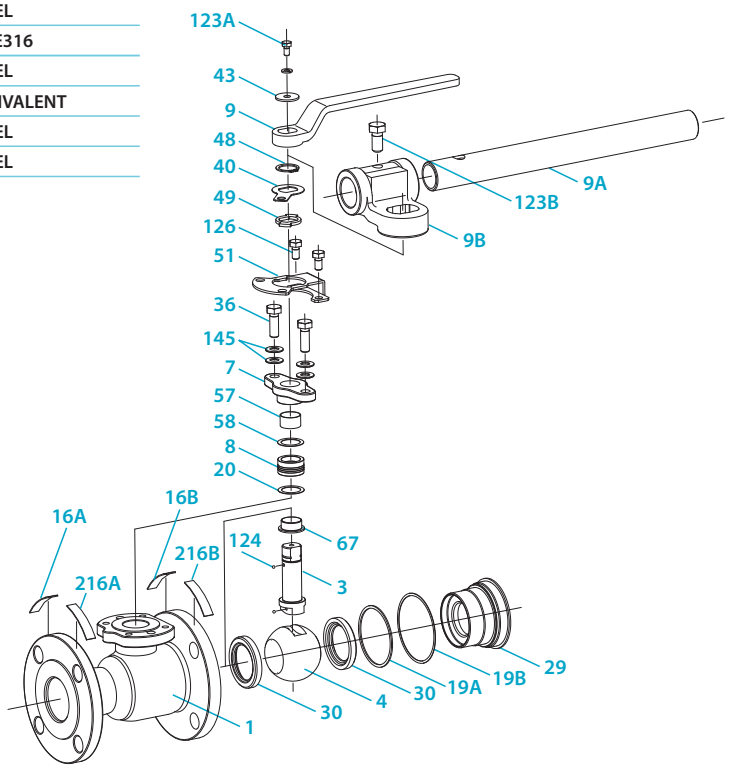

Construction and Materials

No.	Parts	Standard	Super-firesafe
		600SCTBM	600SCTBM-FS
1	BODY	A105*1	
2	BODY CAP	A105*1	
3	STEM	A276 TYPE 316*2	
4	BALL	A276 TYPE 316*2	
7	GLAND	A351 Gr. CF8	
8	GLAND PACKING	PTFE	FLEXIBLE GRAPHITE
9	HANDLE	DUCTILE IRON	
19	GASKET*3	—	FLEXIBLE GRAPHITE SPIRAL WOUND
20	PACKING WASHER	A276 TYPE 316	
30	BALL SEAT	G/F MoS_2 PTFE	
33	CAP NUT	A194 Gr. 2H	
35	CAP BOLT	A193 Gr. B7	
36 A	GLAND BOLT	ALLOY STEEL	
45 B	O RING	NBR	
45	O RING	NBR	
47	THRUST WASHER	METAL BACKED PTFE	
48	SNAP RING	CARBON STEEL	
49	STOPPER	STAINLESS STEEL	
67 A	STEM BEARING	G/F PTFE	
124 B	SPRING & PIN	A313 & A276 TYPE 316	
124	RING SPRING	A276 TYPE 316	
143	SEAT SPRING	A167 TYPE 304	
150	SEAT RETAINER	A105 (Zn PLATING)	
155	SPACER	—	PTFE
175	RETAINER GLAND	—	A105 (Zinc)
176	RETAINER PACKING	—	FLEXIBLE GRAPHITE

*1. A350 low-temperature service materials are optionally available.
*2. Type 304 is optionally available for balls and stems.
*3. These parts are used only for super-firesafe provision.
All part numbers are corresponding with those shown in valve assembly drawings.

■ Standard material configuration can be applied to sour service.

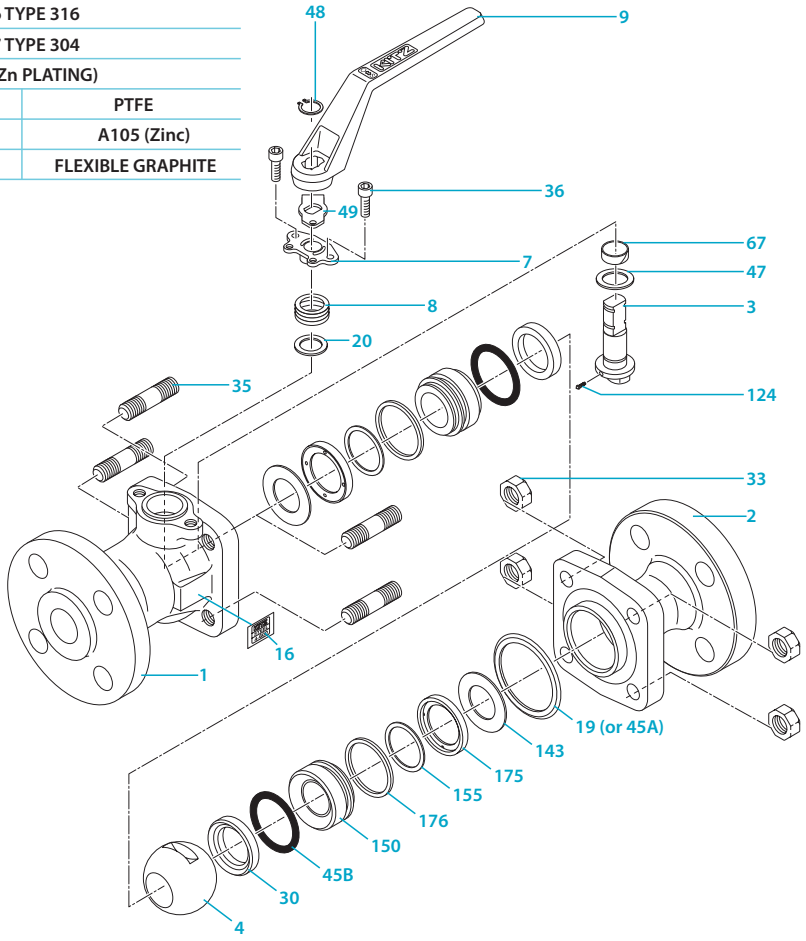

No.	Parts	Standard	Super-firesafe
		600UTBM	600UTBM-FS
1	BODY	A351 Gr. CF8M*1	
2	BODY CAP	A351 Gr. CF8M*1	
3	STEM	A276 TYPE 316	
4	BALL	A276 TYPE 316	
7	GLAND	A351 Gr. CF8	
8	GLAND PACKING	PTFE	FLEXIBLE GRAPHITE
9	HANDLE	DUCTILE IRON	
19	GASKET*2	—	FLEXIBLE GRAPHITE SPIRAL WOUND
20	PACKING WASHER	A276 TYPE 316	
30	BALL SEAT	G/F MoS_2 PTFE	
33	CAP NUT	A194 Gr. 8M	
35	CAP BOLT	A193 Gr. B8M	
36	GLAND BOLT	A193 Gr. B8	
45 A	O RING	FKM	
45 B	O RING	FKM	
47	THRUST WASHER	METAL BACKED PTFE	
48	SNAP RING	A276 TYPE 304	
49	STOPPER	A276 TYPE 304	
67	STEM BEARING	G/F PTFE	
124 A	SPRING & PIN	A313 & A276 TYPE 316	
124 B	RING SPRING	A276 TYPE 316	
143	SEAT SPRING	INCONEL® X-750	
150	SEAT RETAINER	A276 TYPE 304	

*1. Other stainless steel are optionally available.
*2. These parts are used only for super-firesafe provision.
All part numbers are corresponding with those shown in valve assembly drawings.

■ Standard material configuration can be applied to sour service.

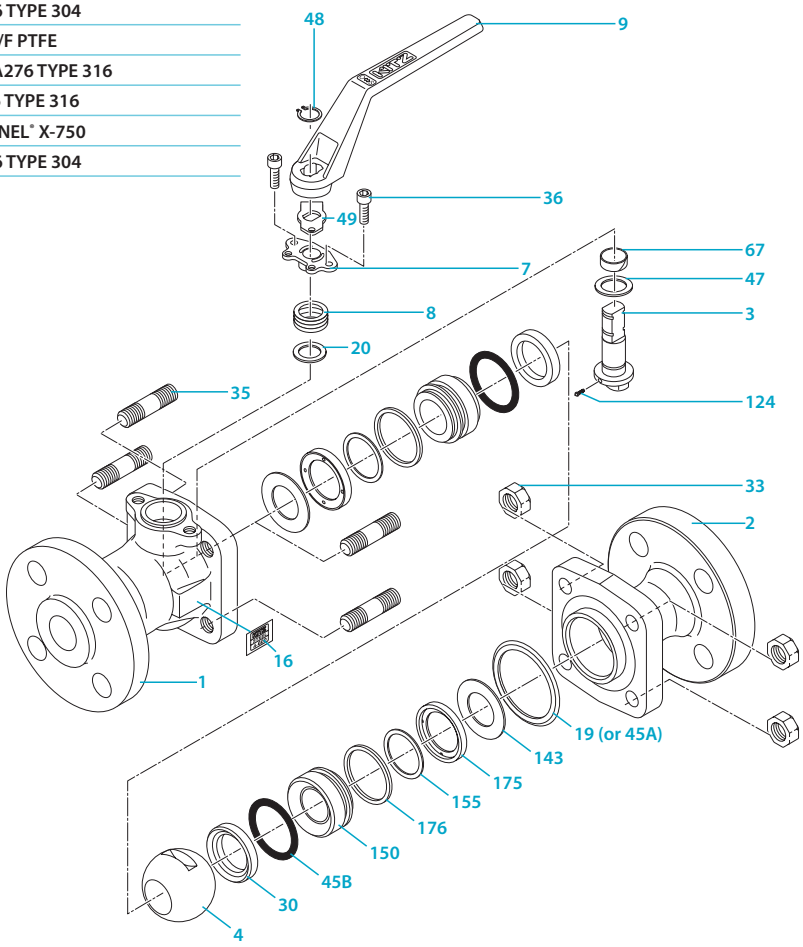

Construction and Materials

No.	Parts	Standard	Super-firesafe
		1500SCTBM	1500SCTBM-FS
1	BODY	A216 Gr. WCB*1	
2	BODY CAP	A216 Gr. WCB*1	
3	STEM	A276 TYPE 316*2	
4	BALL	A276 TYPE 316*2	
7	GLAND	A351 Gr. CF8	
8	GLAND PACKING	PTFE	FLEXIBLE GRAPHITE
9	HANDLE	DUCTILE IRON	—
19	GASKET*3	—	FLEXIBLE GRAPHITE SPIRAL WOUND
30	BALL SEAT	MoS_2 NYLON	
31	STEM WASHER	A276 TYPE 316	
33	CAP NUT	A194 Gr. 2H	
35 A	CAP BOLT	A193 Gr. B7	
36 B	GLAND BOLT	ALLOY STEEL	
45	O RING	NBR	
45	O RING	NBR	
47	THRUST WASHER	METAL BACKED PTFE	
48	SNAP RING	CARBON STEEL	
49	STOPPER	STAINLESS STEEL	
67	STEM BEARING	G/F PTFE	
85	PLUG	CARBON STEEL	
124	SPRING & PIN	A313 & A276 TYPE 316	
143	SEAT SPRING	A167 TYPE 304	
146	BACK-UP RING	PTFE	
150	SEAT RETAINER	A105 (Zinc)	
155	SPACER	—	PTFE
175	RETAINER GLAND	—	A105(Zinc)
176	RETAINER PACKING	—	FLEXIBLE GRAPHITE

*1. A352 low-temperature service materials are optionally available.
*2. Type 304 is optionally available for balls and stems.
*3. These parts are used only for super-firesafe provision.
All part numbers are corresponding with those shown in valve assembly drawings.

■ Standard material configuration can be applied to sour service.

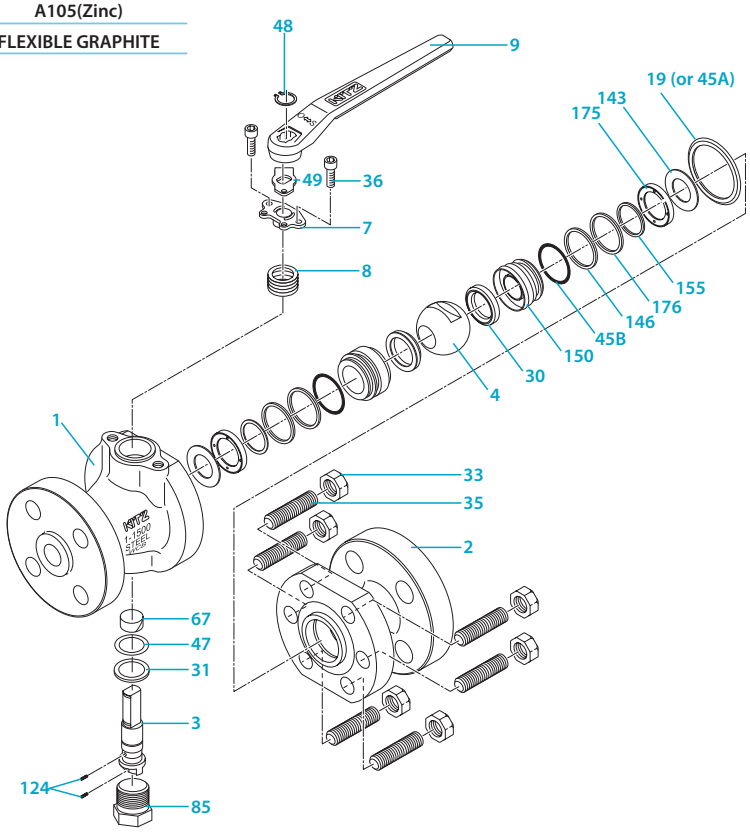

No.	Parts	Standard	Super-firesafe
		1500UTBM	1500UTBM-FS
1	BODY	A351 Gr. CF8M*1	
2	BODY CAP	A351 Gr. CF8M*1	
3	STEM	A276 TYPE 316	
4	BALL	A276 TYPE 316	
7	GLAND	A351 Gr. CF8	
8	GLAND PACKING	PTFE	FLEXIBLE GRAPHITE
9	HANDLE	DUCTILE IRON	
19	GASKET*2	—	FLEXIBLE GRAPHITE SPIRAL WOUND
30	BALL SEAT	MoS_2 NYLON	
31	STEM WASHER	A276 TYPE 316	
33	CAP NUT	A194 Gr. 8	
35	CAP BOLT	A193 Gr. B8	
36	GLAND BOLT	A193 Gr. B8	
45 A	O RING	FKM	
45 B	O RING	FKM	
47	THRUST WASHER	METAL BACKED PTFE	
48	SNAP RING	A276 TYPE 304	
49	STOPPER	A276 TYPE 304	
67	STEM BEARING	G/F PTFE	
85	PLUG	A276 TYPE 316	
124	SPRING & PIN	A313 & A276 TYPE 316	
143	SEAT SPRING	INCONEL® X-750	
146	BACK-UP RING	PTFE	
150	SEAT RETAINER	A276 TYPE 316	

*1. Other stainless steel are optionally available.
*2. These parts are used only for super-firesafe provision.
All part numbers are corresponding with those shown in valve assembly drawings.

■ Standard material configuration can be applied to sour service.

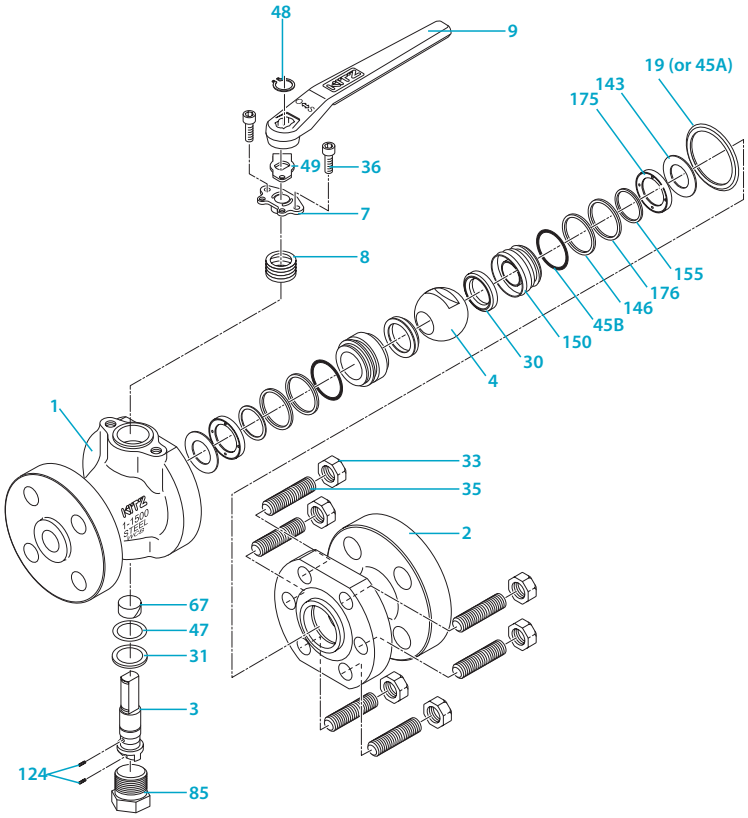

Technical Features of KITZ HYPATITE®

KITZ HYPATITE® ball seats are made of modified PTFE, and specifically engineered for high sealing performance and prolonged service life of valves, in place of conventional glass-filled or virgin PTFE seats. The unique performance features are compared with those of conventional glass-filled or virgin PTFE seats below. With the introduction of HYPATITE® ball seats, glass-filled PTFE version is no longer available from KITZ Corporation, while carbon-filled or virgin PTFE seats remain available as options.

Our HYPATITE® ball seats also out perform conventional PTFE seats with its monomer resistance feature. Also, PFA resin, assures the characteristic of fluorine resin such as excellent resistance characteristics to highor low temperatures, creep or compression, abrasion and general chemicals.

Table 1 and Figure 1,2 and 3 here explain these technical features of HYPATITE® ball seats compared with conventional seat materials. For compared pressure-temperature ratings
Refer Page 13 and 14

Table 1. Compared Technical Features of KITZ Ball Seats

Compared features	HYPATITE®	PTFE seats	Glass-filled PTFE seats
Heat resistance	Good		Good
Sealing performance	Good	Good	Good
Durability (Pitting-resistance)	Good		Fair
Creep and compression resistance	Good		Fair
Chemical resistance*	Good	Good	
Abrasion resistance	Good	Good	Good
Firesafe provision	Good	Good	
Throttling service	Fair	Fair	Fair
Product contamination	None	None	
Valve operating torque	Low	Low	Low

Fig. 1 KITZ Ball Valve Seats Compared Lab Test Results Against Gaseous Butadiene Monomer vs. Styrene Monomer

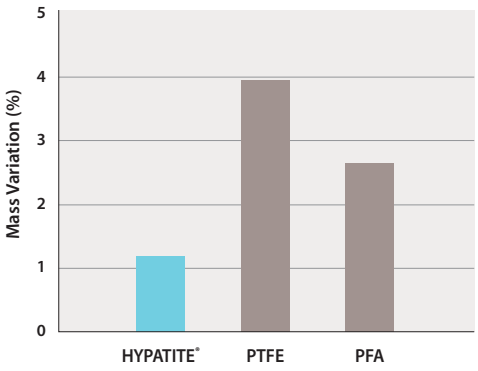

Test conditions:
Exposed to gaseous butadiene for 120 hours
119 to 122 psig
140°F to 158°F

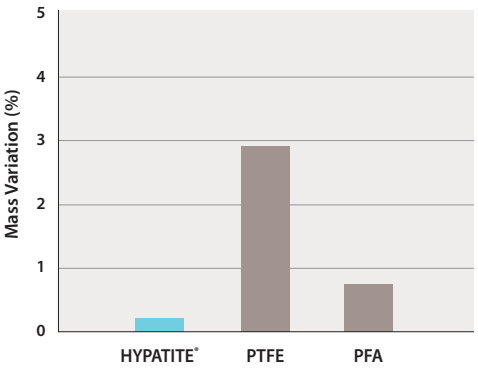

Test conditions:
Exposed to gaseous styrene for 240 hours
2.9 to 5.8 psig
140°F to 176°F

Fig. 2 KITZ Ball Valve Seats Compared Results of Mechanical Load Tests Ⅰ

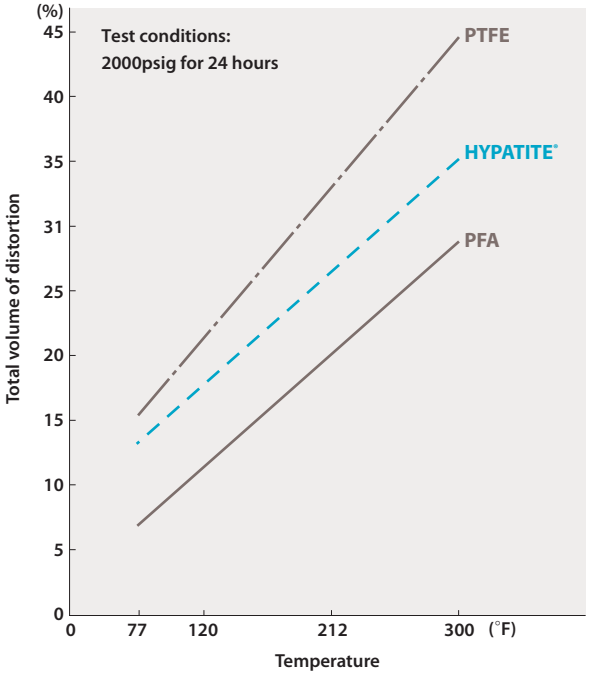

Fig. 3 KITZ Ball Valve Seats Compared Results of Mechanical Load Tests Ⅱ

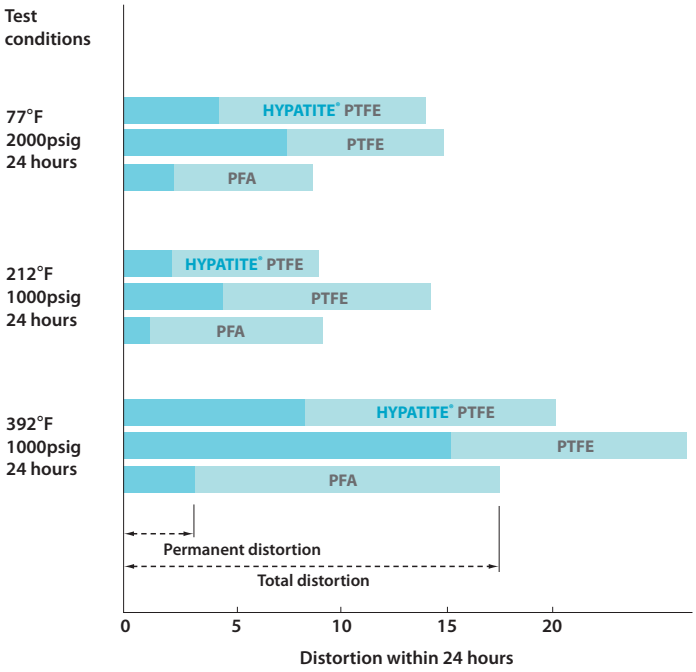

This data shows the results of some of the tests carried out at our laboratory under the specific test conditions introduced here. Variation in the type of test media, the phase of test media (gaseous or liquid), preparation of test specimen and test conditions such as pressure, temperature and duration, may cause the test results to be different from this data, but general monomer resistance levels of the seats introduced here are comparatively as exhibited in this test data.

Fire Test Standards

1. Introduction

Plant fires have become an increasingly serious concern due to the installation of a greater number of soft-seated ball and butterfly valves in place of conventional metal-seated gate and globe valves at many refineries and petrochemical plants. Extremely high temperatures usually result in decomposition or deterioration of resilient or non-metallic sealing components such as seats, gland packing rings, O-rings and gaskets, causing leakage of line fluid which, in turn, increases the magnitude of plant fires.

To minimize the extent of damage in such a mishap, soft-seated valves are expected to have the provision for secondary metal-to-metal sealing functions to minimize external and internal (through-the-bore) leakages as well as the provision for undisturbed valve operation during or after the fire enabling emergency shut-off or release of line fluid.

Soft-seated valves can be manufactured to meet such critical fire safety requirements, when designed adequately, machined and assembled correctly, and equipped with proper sealing components.
Valves designed and manufactured in such a way may be called "firesafe valves". Manufacturers' claims of fire safety, however, remain subjective.

To verify the firesafe performance capability, the valve must be subjected to simulated plant fire conditions. API and BSI have developed technical specifications for such destructive tests, which are generally known as fire test standards. Fire tests are destructive and cost a lot to carry out due to high test expenses and bills for a third party's certification, let alone the cost of destroyed samples. Such high costs eventually prohibit repetition of fire tests. To minimize the frequency of fire tests, all existing fire test standards allow a certain range of sizes and pressure classes be qualified and certified without actual test being carried out, given that valves are designed the same and their non-metallic sealing materials are considered same as the actually tested valve.

2. History

BS 6755, Part 2 (*1) was issued to introduce, in a different form of presentation, the technical contents of **API 6FA** (*2) and **API 607** (*3), with the intention of replacing the requirements of BS 5146, Part 1,Appendix A.1 (*4). Until this new British Standard was issued, technical differences between British Standard and API Standards resulted in high costs to valve manufacturers who desired to certify their products to these standard, and caused confusion amongst contractors and end-users in their evaluation of the products to be purchased.

Even within the United States, valve manufacturers, contractors and end-users had similar difficulties because of different fire test requirements which existed between API Production Department (which is now responsible for API 6FA) and API Refining Department (which has been responsible for API 607).

Following the virtual unification of fire test requirements by API Production and Refining Departments in their latest 1985 issues, BSI finally launched a major program to adopt American standards as their own, which shall eventually help realize a globally unified fire test standard through ISO.

*1 "Testing of valves: Specification for fire type-testing requirements".
*2 "Specification for fire test for valves".
*3 "Fire test for soft-seated quarter-turn valves".
*4 "Inspection and test of valves: Specification for steel valves for the petroleum, petrochemical and allied industries: Fire safe testing of soft seated ball valves".

3. Objective of Standardization

As highlighted by all of these standards, the fire test standard is prepared to establish test requirements which cover test procedures, performance requirements or evaluation criteria, product qualification and test certification, for the objective of technical evaluation of pressure containing capability of valves exposed to pre-determined, simulated fire conditions.

Here, the performance requirements are intended to establish limits of acceptability of valves regardless of size, nominal pressure or class rating. The burn period, or test duration, is decided on the basis that it represents the maximum time required to extinguish most plant fires. Fires of longer duration than specified in the standards shall be, therefore, considered to be of a major magnitude with consequences, or damage, greater than those anticipated in the fire tests.

For this reason, requirements for more or less stringent testing may be negotiated and established by the valve manufacturer and its customer to meet the customer's specific service applications.

4. Evaluation of Test Results

The maximum allowable leakage rates in these standards are determined for the defined test temperature, pressure and duration. Here it is noted that leakages under other test conditions may be substantially different. Fire test standards are prepared for just a prototype test of the valve with a size and class rating selected by the manufacturer under pre-determined test conditions assumably representing typical plant fire conditions. This can be translated to mean that test reports certified to any of these fire test standards do not necessarily verify satisfactory performance of the valves that users may purchase from the manufacturer at any given time. As already mentioned, the fire test is a kind of destructive test (unlike the pressure test conducted for normal valve shipments), and no one would be willing to purchase such destructively tested valves in a commercial transaction.

It is specifically mentioned in BS 5146, Appendix A.1 that the "test is intended only as a prototype test and is intended to cover a range of sizes of valves having the same pressure rating, design details and material composition". A test report prepared by BSI for the fire test conducted on KITZ ball valves mentioned that the "report only relates to the actual ball valves which were tested and assessed. The results obtained therefore do not necessarily relate to samples from the production line and in no way imply the performance or quality of the continuing production."

The range of sizes and pressure classes to be automatically qualified by a prototype test of a valve of a certain size and rating is introduced here. Also it should be noted that potential leakage from pipe-to-valve end connection joint (either flanged, threaded or welded) cannot be evaluated by these standards, and not included in the allowable external leakages specified. API Production Department issued a standard API Bulletin 6F1 (*5), for performance evaluation of such valve end connections exposed to the fire.

*5 Bulletin on Performance of API and ASME End Connections in a Fire Test According to API Specification 6FA.

General Precautions for Trouble-free Operation of Soft-seated Ball Valves

1. Excessive Cavity Pressure

Refer to Page 10. Very important

2. High-Temperature and High-Pressure Service

The pressure-temperature ratings published by manufacturers are usually considered an appropriate guide to the maximum temperature and pressure that such ball valves may withstand. KITZ recommends, however, reference to the valve distributor or manufacturer for an assurance of suitability when ball valves are to be subjected to the following conditions:

a: **Floating ball valves** are left closed for a long period of time under high temperature or high differential pressure.
b: **Floating ball valves** are operated frequently for long periods of time under high temperature or high differential pressure.
c: **Floating ball valves** are subjected to frequent change of the line pressure or service temperature.

3. Liquids with High Velocity

When ball valves must be operated frequently on liquids with very high velocity, a check should be made with the valve distributor or manufacturer for appropriate advice to minimize the possibility of seat deformation, especially when they are highly pressurized on high-temperature lines.

4. Valve Selection

Be sure to select a valve with design specifications that meet the pressure and temperature conditions required. Take special care to select the valve to be used for fluids containing abrasives, since the high molecular materials employed in the seats could suffer degradation.

5. Valve Installation

Before installing the valve, the pipe bore should be checked to confirm that no weld spatter, scale or rust particles remain inside. For mounting flanged valves, diagonally located flange bolts should be tightened evenly.

6. Degree of Valve Opening

Soft seated ball valves should be considered as ON / OFF valves only and care should be taken to ensure that they are fully closed or open. Opening ball valves partially can result in seat erosion and cause seat leakage. Pipelines that require the use of ball valves for throttling service should be designed in consideration of the amount of the seat leakage which may occur in its fully closed position. Note that ball valves should be stored in a fully open position.

7. Valve Actuation

Two types of pneumatic valve actuator KITZ B-Series and FA-Series are available for our factory mounting. Also KITZ "KELMO" electric actuators are available. Electric actuators or pneumatic actuators of any other specified brand is also available for mounting.
If a user mounts its own actuators on KITZ ball valves, however, all users are recommended to contact KITZ or its authorized distributors for adequate technical advice, because any improper sizing of actuators may cause serious problems in the field. It must be noted that the actual value of the operating torque of any given valve may vary, depending on the service conditions listed below:

(1) Fluid
  a. Kind of fluid
  b. Line pressure
  c. Line temperature
  d. Fluid volume
(2) Ambient temperature
(3) Opening / closing degree
(4) Type of actuator
(5) Frequency and pattern of change of line pressure
(6) Frequency and pattern of change of line and ambient temperatures

8. Valve Disassembly

The line fluid should be completely removed from the internal of the valves before they are removed from the pipeline for maintenance.
Even after the line fluid has been discharged through the pipeline, some fluid is always trapped inside the body and body cavity (the area surrounded by the body, ball and two seats).
Be sure to completely discharge the pressure trapped in the body cavity, before valve disassembly.

Inspection and Warranty

Each KITZ ball valve is subjected to 100% in-house inspection designated by API 598 or BS 6755 Part 1. This includes hydrostatic shell tests and pneumatic low-pressure seat test. Manufacturer's material certificates and test reports are available upon request. Each KITZ ball valve is guaranteed for 12 months after placement in service, but not exceeding 18 months after shipment from KITZ factories.

Flow Characteristics

One of the biggest advantages of ball valves versus other types is that the flow through them is greater for the same bore size. Fluid is disturbed less by turbulence or pulsation.
To determine the flow rate through a valve at a specific opening, multiply the flow rate (Flow rate(%)) given in the curve to the right by the pressure loss given below.

Valve opening vs flow rate

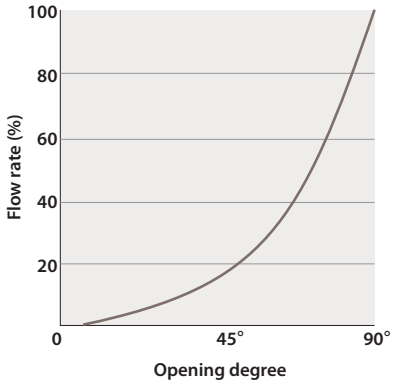

Pressure Loss vs. Flow Rate

Full port valves

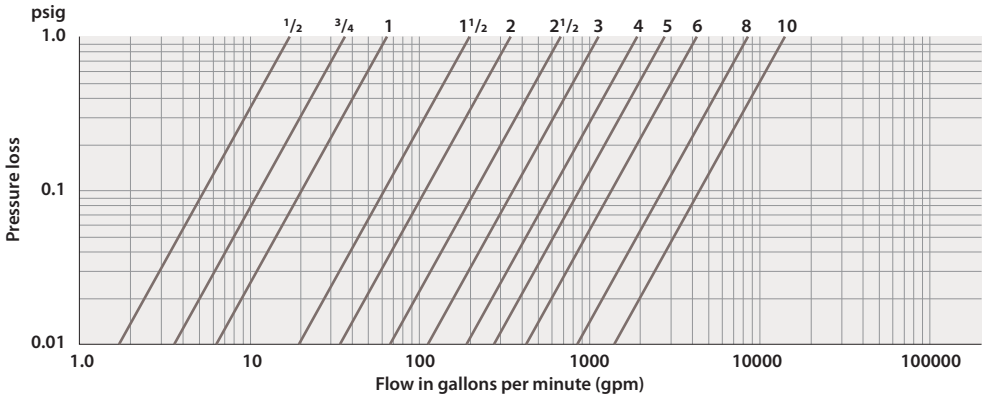

Single reduced

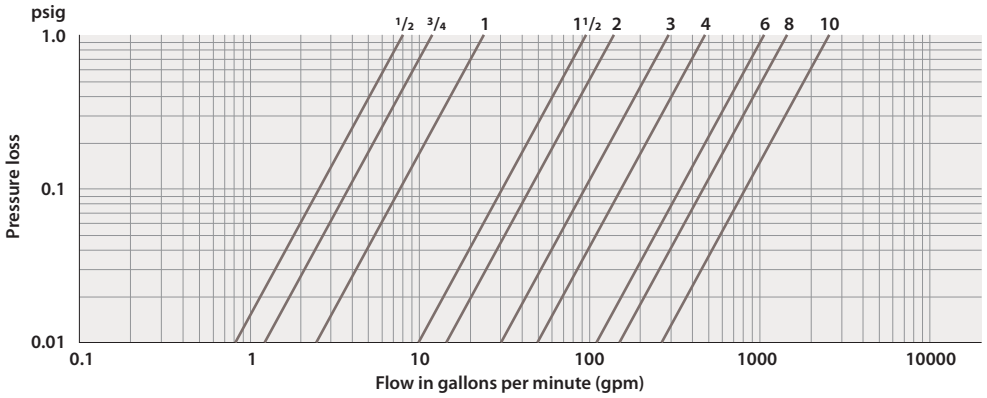

Schedule 40 steel pipe (10m)

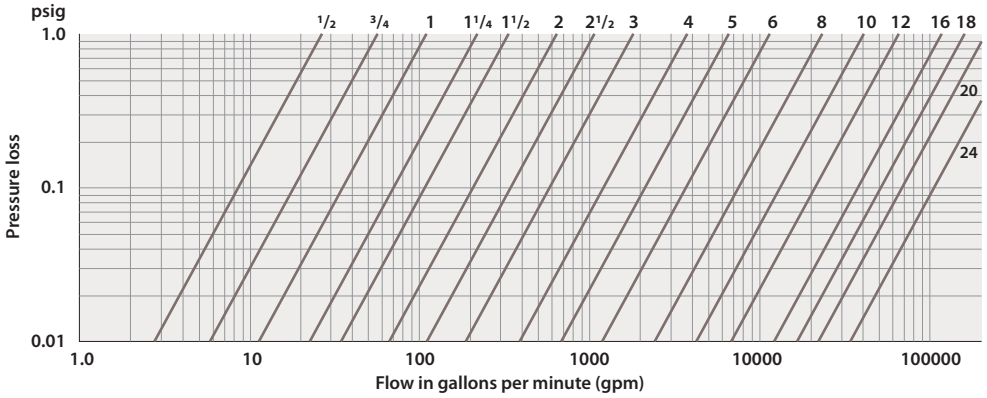

Steel Pipe Flanges

ASME B16.5-1996
Class 150 RF, Class 300 RF

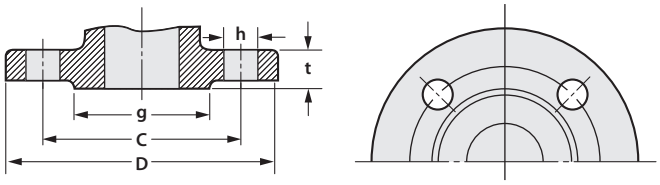

Class 150 steel pipe flange dimensions

Nominal Size	D	C	g	t	h (Bolt hole)	Bolt	
inches	in.	in.	in.	in.	in.	Number	Diam.
1/2	3.50	2.38	1.38	0.44	0.62	4	1/2
3/4	3.88	2.75	1.69	0.50 (0.44)	0.62	4	1/2
1	4.25	3.12	2.00	0.62 (0.56)	0.62	4	1/2
1 1/4	4.62	3.50	2.50	0.75 (0.69)	0.62	4	1/2
1 1/2	5.00	3.88	2.88	0.94 (0.44)	0.62	4	1/2
2	6.00	4.75	3.62	0.56 (0.44)	0.75	4	5/8
2 1/2	7.00	5.50	4.12	0.56 (0.44)	0.75	4	5/8
3	7.50	6.00	5.00	0.56 (0.44)	0.75	4	5/8
4	9.00	7.50	6.19	0.94	0.75	8	5/8
5	10.00	8.50	7.31	0.94	0.88	8	3/4
6	11.00	9.50	8.50	1.00	0.88	8	3/4
8	13.50	11.75	10.62	1.12	0.88	8	3/4
10	16.00	14.25	12.75	1.19	1.00	12	7/8
12	19.00	17.00	15.00	1.25	1.00	12	7/8
14	21.00	18.75	16.25	1.38	1.12	12	1
16	23.50	21.25	18.50	1.44	1.12	16	1
18	25.00	22.75	21.00	1.56	1.25	16	1 1/8
20	27.50	25.00	23.00	1.69	1.25	20	1 1/8
24	32.00	29.50	27.25	1.88	1.38	20	1 1/4

Height of raised face is 0.06 inch each. Dimensions in ( ) are for valve flanges.

Class 300 steel pipe flange dimensions

Nominal Size	D	C	g	t	h (Bolt hole)	Bolt	
inches	in.	in.	in.	in.	in.	Number	Diam.
1/2	3.75	2.62	1.38	0.56	0.62	4	1/2
3/4	4.62	3.25	1.69	0.62	0.75	4	5/8
1	4.88	3.50	2.00	0.69	0.75	4	5/8
1 1/4	5.25	3.88	2.50	0.75	0.75	4	5/8
1 1/2	6.12	4.50	2.88	0.81	0.88	4	3/4
2	6.50	5.00	3.62	0.88	0.75	8	5/8
2 1/2	7.50	5.88	4.12	1.00	0.88	8	3/4
3	8.25	6.62	5.00	1.12	0.88	8	3/4
4	10.00	7.88	6.19	1.25	0.88	8	3/4
5	11.00	9.25	7.31	1.38	0.88	8	3/4
6	12.50	10.62	8.50	1.44	0.88	12	3/4
8	15.00	13.00	10.62	1.62	1.00	12	7/8
10	17.50	15.25	12.75	1.88	1.12	16	1
12	20.50	17.75	15.00	2.00	1.25	16	1 1/8
14	23.00	20.25	16.25	2.12	1.25	20	1 1/8
16	25.50	22.50	18.50	2.25	1.38	20	1 1/4
18	28.00	24.75	21.00	2.38	1.38	24	1 1/4
20	30.50	27.00	23.00	2.50	1.38	24	1 1/4
24	36.00	32.00	27.25	2.75	1.62	24	1 1/2

Height of raised face is 0.06 inch each.

Steel Pipe Flanges

Class 600 RF

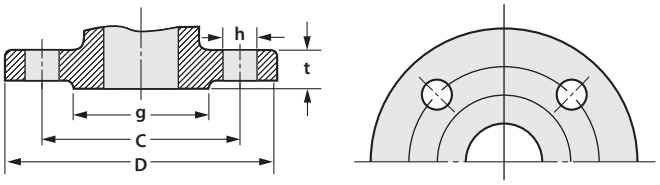

Class 600 steel pipe flange dimensions

Nominal Size	D	C	g	t	h (Bolt hole)	Bolt	
inches	in.	in.	in.	in.	in.	Number	Diam.
1/2	3.75	2.62	1.38	0.56	0.62	4	1/2
3/4	4.62	3.25	1.69	0.62	0.75	4	5/8
1	4.88	3.50	2.00	0.69	0.75	4	5/8
1 1/4	5.25	3.88	2.50	0.81	0.75	4	5/8
1 1/2	6.12	4.50	2.88	0.88	0.88	4	3/4
2	6.50	5.00	3.62	1.00	0.75	8	5/8
2 1/2	7.50	5.88	4.12	1.12	0.88	8	3/4
3	8.25	6.62	5.00	1.25	0.88	8	3/4
4	10.75	8.50	6.19	1.50	1.00	8	7/8
5	13.00	10.50	7.31	1.75	1.12	8	1
6	14.00	11.50	8.50	1.88	1.12	12	1
8	16.50	13.75	10.62	2.19	1.25	12	1 1/8
10	20.00	17.00	12.75	2.50	1.38	16	1 1/4
12	22.00	19.25	15.00	2.62	1.38	20	1 1/4
14	23.75	20.75	16.25	2.75	1.50	20	1 3/8
16	27.00	23.75	18.50	3.00	1.62	20	1 1/2
18	29.25	25.75	21.00	3.25	1.75	20	1 5/8
20	32.00	28.50	23.00	3.50	1.75	24	1 5/8
24	37.00	33.00	27.25	4.00	2.00	24	1 7/8

Height of raised face is 0.25 inch each.

Class 1500 RF

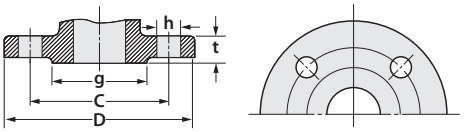

Class 600 to 1500

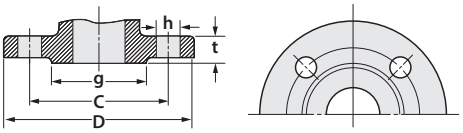

Class 150, 300

Class 1500 steel pipe flange dimensions

Nominal Size	D	C	g	t	h (Bolt hole)	Bolt	
inches	in.	in.	in.	in.	in.	Number	Diam.
1/2	4.75	3.25	1.38	0.88	0.88	4	3/4
3/4	5.12	3.50	1.69	1.00	0.88	4	3/4
1	5.88	4.00	2.00	1.12	1.00	4	7/8
1 1/4	6.25	4.38	2.50	1.12	1.00	4	7/8
1 1/2	7.00	4.88	2.88	1.25	1.12	4	1
2	8.50	6.50	3.62	1.50	1.00	8	7/8
2 1/2	9.62	7.50	4.12	1.62	1.12	8	1
3	10.50	8.00	5.00	1.88	1.25	8	1 1/8
4	12.25	9.50	6.19	2.12	1.38	8	1 1/4
5	14.75	11.50	7.31	2.88	1.62	8	1 1/2
6	15.50	12.50	8.50	3.25	1.50	12	1 3/8
8	19.00	15.50	10.62	3.62	1.75	12	1 5/8
10	23.00	19.00	12.75	4.25	2.00	12	1 7/8
12	26.50	22.50	15.00	4.88	2.12	16	2
14	29.50	25.00	16.25	5.25	2.38	16	2 1/4
16	32.50	27.75	18.50	5.75	2.62	16	2 1/2
18	36.00	30.50	21.00	6.38	2.88	16	2 3/4
20	38.75	32.75	23.00	7.00	3.12	16	3
24	46.00	39.00	27.25	8.00	3.62	16	3 1/2

Height of raised face is 0.25 inch each.

Steel Pipe Flanges

ASME 16.47-1996 (Series A)

Class 150 steel pipe flange dimensions

Nominal Size	D	C	g	t	h (Bolt hole)	Bolt	
inches	in.	in.	in.	in.	in.	Number	Diam.
26	34.25	31.75	29.50	2.69	1.38	24	1 1/4
28	36.50	34.00	31.50	2.81	1.38	28	1 1/4
30	38.75	36.00	33.75	2.94	1.38	28	1 1/4
32	41.75	38.50	36.00	3.18	1.62	28	1 1/2
34	43.75	40.50	38.00	3.25	1.62	32	1 1/2
36	46.00	42.75	40.25	3.56	1.62	32	1 1/2

Height of raised face is 0.06 inch each.

Class 300 steel pipe flange dimensions

Nominal Size	D	C	g	t	h (Bolt hole)	Bolt	
inches	in.	in.	in.	in.	in.	Number	Diam.
26	38.25	34.50	29.50	3.12	1.75	28	1 5/8
28	40.75	37.00	31.50	3.38	1.75	28	1 5/8
30	43.00	39.25	33.75	3.62	1.88	28	1 3/4
32	45.25	41.50	36.00	3.88	2.00	28	1 7/8
34	47.50	43.50	38.00	4.00	2.00	28	1 7/8
36	50.00	46.00	40.25	4.12	2.12	32	2

Height of raised face is 0.06 inch each.

Class 600 steel pipe flange dimensions

Nominal Size	D	C	g	t	h (Bolt hole)	Bolt	
inches	in.	in.	in.	in.	in.	Number	Diam.
26	40.00	36.00	29.50	4.25	2.00	28	1 7/8
28	42.25	38.00	31.50	4.38	2.12	28	2
30	44.50	40.25	33.75	4.50	2.12	28	2

Height of raised face is 0.25 inch each.

⚠ CAUTION

Pressure-temperature ratings and other performance data published in this catalog have been developed from our design calculation, in-house testing, field reports provided by our customers and/or published official standards or specifications. They are good only to cover typical applications as a general guidance to users of KITZ products introduced in this catalog.

For any specific application, users are kindly requested to contact KITZ Corporation for technical advice, or to carry out their own study and evaluation for proving suitability of these products to such an application. Failure to follow this request could result in property damage and/or personal injury, for which we shall not be liable.

While this catalog has been compiled with the utmost care, we assume no responsibility for errors, impropriety or inadequacy. Any information provided in this catalog in subject to from-time-to-time change without notice for error rectification, product discontinuation, design modification, new product introduction or any other cause that KITZ Corporation considers necessary. This edition cancels all previous issues.

⚠ NOTICE

If any products designated as strategic material in the Foreign Exchange and Foreign Trade Law, Cabinet Order Concerning Control of Export Trade, Cabinet Order Concerning Control of Foreign Exchange and other related laws and ordinances ("Foreign Exchange Laws") are exported to any foreign country or countries, an export license issued by the Japanese Government will be required under the Foreign Exchange Laws.

Further, there may be cases where an export license issued by the government of the United States or other country will be required under the applicable export-related laws and ordinances in such relevant countries.

The contract shall become effective subject to that a relevant export license is obtained from the Japanese Government.

ISO 9001 certified since 1989

KITZ

KITZ CORPORATION OF AMERICA
10750 Corporate Drive, Stafford, Texas 77477, U.S.A.
Phone: 281-491-7333 Fax: 281-491-9402
www.kitzus-kca.com

—— Distributed by ——

Printed in Japan

1112①α-SP